Standard Parts & Material List

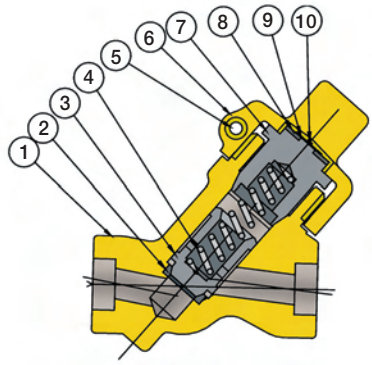

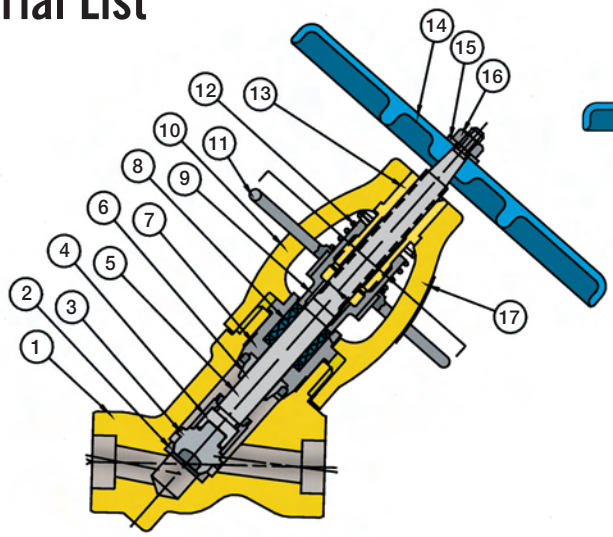

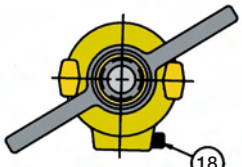

Globe Valve

No.	Name	Carbon Steel	Low Alloy	Stainless
1	Body	SA-105	SA-182 F22 or SA-182 F91	SA-182 F316
2	Seat	Cobalt Alloy-AMS 5387A	Cobalt Alloy-AMS 5387A	Cobalt Alloy-AMS 5387A
3	Disc	Cobalt Alloy-AMS 5387A	Cobalt Alloy-AMS 5387A	Cobalt Alloy-AMS 5387A
4	Retainer	ASTM A 582 416	ASTM A 582 416	SA-479 316
5	Stem	ASTM A 582 416	ASTM A 582 416	SA479-XM19H
6	Stem Guide	SA479-UNS S21800	ASTM- A732-GR21	SA479-UNS S21800
7	Bonnet/Chamber	SA479-410	SA479-410	SA479-XM19H
8	Packing	Flexible Graphite Die Formed Packing Rings Braided Carbon Yarn Wiper Rings	Flexible Graphite Die Formed Packing Rings Braided Carbon Yarn Wiper Rings	Flexible Graphite Die Formed Packing Rings Braided Carbon Yarn Wiper Rings
9	Gland	ASTM A 582 416	ASTM A 582 416	ASME SA-479 316
10	Yoke	SA-105	SA-182 F22	SA-182 F316
11	I.G.W.[2]	AMS 5370	AMS 5370	AMS 5370
12	Spring[1]	Stainless	Stainless	Stainless
13	Bushing	ASME SB-150-C64200	ASME SB-150-C64200	ASME SB-150-C64200
14	Handle/Handwheel	Malleable Iron	Malleable Iron	Malleable Iron
15	Washer[3]	Steel	Steel	Steel
16	Locknut	Steel	Steel	Steel
17	ID Plate	Stainless Steel	Stainless Steel	Stainless Steel
18	Clampbolt	Stainless	Stainless	Stainless
19	Adaptor	Malleable Iron	Malleable Iron	Malleable Iron

[2] Integral Gland Wrench
[1] Live Loaded Gland - Optional Accessory
[3] Retainer Washer required with sizes 8, 9 and 10

Check Valve

No.	Name	Carbon Steel	Low Alloy	Stainless
1	Body	SA-105	SA-182 F22, SA-182 F91	SA-182 F316
2	Seat	Cobalt Alloy-AMS 5387A	Cobalt Alloy-AMS 5387A	Cobalt Alloy-AMS 5387A
3	Piston	Cobalt Alloy-AMS 5387A	Cobalt Alloy-AMS 5387A	Cobalt Alloy-AMS 5387A
4	Spring	Inconel X No. 1 Temper	Inconel X No. 1 Temper	Inconel X No. 1 Temper
5	Clampbolt	Stainless	Stainless	Stainless
6	Yoke	SA-105	SA-182 F22	SA-182 F316
7	Bonnet	SA479-XM-19H	SA479-XM-19H	SA479-XM-19H
8	ID Plate	Stainless Steel	Stainless Steel	Stainless Steel
9	Washer	Steel	Steel	Steel
10	Rivet	Steel	Steel	Steel