ONYX VALVE
835 Industrial Hwy, Cinnaminson, NJ 08077
phone: 856-829-2888 | Fax: 856-829-3080 | onyxvalve.com

Onyx Pressure Sensors



ONYX VALVE

Table of Contents

	Model	Description	Page
	PSW	Wafer Style Sizes: 1″ - 36″	1
	PSR	Full Face with Thru Bolt holes Sizes 1″ - 42″	2
	PSS	Screw on Connection Sizes: 1/2″ - 4″	3
	PSQ	Tri-Clover Pipe Connection Sizes: 1″ - 6″	4
	Model K	Diaphragm Seal	5
	Smart Box 3	Pump Protection Control Box	6
	Calibrating Machine	Instrumentation Calibrating Dead Weight Tester	7
	Syringe Fill Kit	Fill tool kit for Onyx Sensor Rings and Instruments	8
	Instrumentation Manifolds and Pressure Sensor Applications		9

PSW



The Onyx Isolator Ring provides a simple, method to measure pressure of slurries and corrosive fluids. The PSW series is compatible with flanged pipe connections. Nesting inside the bolt circle of mating flanges provides accurate alignment and minimum weight at the lowest installed cost.

The inside diameter of the PSW precisely matches standard pipe for smooth, unobstructed flow, self-cleaning operation, and minimum turbulence and friction. Onyx ultra-deep vacuum filling insures the highest accuracy in the industry. The patented "Module Seal" - standard on all Onyx Isolator Rings - allows instruments to be or replaced or calibrated with minimum down time.

Materials of Construction

Center Section:	Carbon Steel	Carbon-Kynar Coat	316 Stainless Steel
End Plates:	Acetal (Standard) 316 Stainless Steel Teflon	Kynar Titanium	UHMW-PE Carpenter-20
Elastomer: (Available with optional Teflon coatings)	Nitrile (Buna-N) EPDM* (Nordel*) Neoprene Viton Hypalon	-30°F →220°F -40°F →300°F -20°F →220°F -15°F →375°F -10°F →250°F	
Fill Fluid:	Silicone Fluid Food Grade Silicone	-40°F →400°F -20°F →400°F	
Module Seal Stinger Fitting:	Brass	316 Stainless Steel	
Pipe Fittings:	Carbon Steel	316 Stainless Steel	
Pressure Range:	Vacuum to +1,000 psi	The Onyx Isolator ring has been tested by an independent lab to 1,500 psi.	

Benefits:

- Absolute immunity to clogging
- Combines accurate alignment, reduced weight, and maximum economy
- Mates with 150# flanges, compatible with 300# or 600# flanges with adapters
- Superior accuracy compared to diaphragm seals
- No tools required to change pressure instrument
- High displacement design can operate up to three instruments on one ring

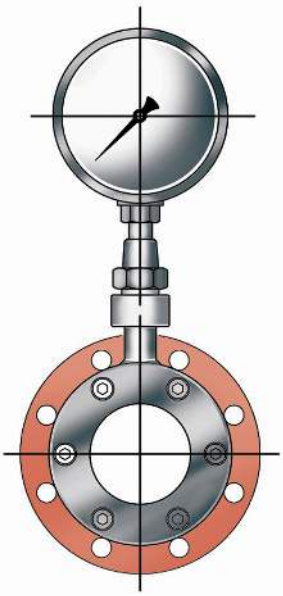

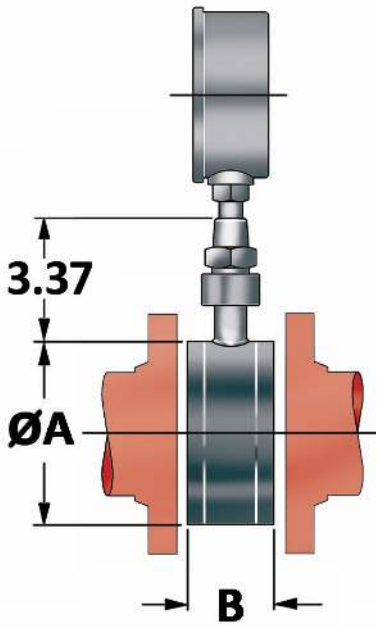

Size	ØA	B
1	2.50	1.87
1 ½	3.25	1.87
2	4.00	1.87
2 ½	4.75	1.87
3	5.25	1.87
4	6.75	2.12
5	7.62	2.25
6	8.62	2.25
8	10.87	2.25
10	13.25	2.81
12	16.00	3.12
14	17.62	3.12
16	20.12	3.12
18	21.50	3.12
20	23.75	3.12
36	41.12	4.00

PSR



The Onyx Isolator Ring provides a simple, method to measure pressure of slurries and corrosive fluids. The PSR series is compatible with flanged pipe connections. The full face thru bolt holes match the bolt circle of mating flanges for accurate alignment making it the ideal choice for use with non-metallic flanges.

The inside diameter of the PSR precisely matches standard pipe for smooth, unobstructed flow, self-cleaning operation, and minimum turbulence and friction. Onyx ultra-deep vacuum filling insures the highest accuracy in the industry. The patented "Module Seal" - standard on all Onyx Isolator Rings - allows instruments to be or replaced or calibrated with minimum down time.

Materials of Construction

Center Section:	Carbon Steel	PVC-C	316 Stainless Steel
End Plates:	Acetal (Standard) 316 Stainless Steel Teflon	Kynar Titanium PVC	UHMW-PE Carpenter-20
Elastomer: (Available with optional Teflon coatings)	Nitrile (Buna-N) EPDM (Nordel) Neoprene Viton Hypalon	-30°F →220°F -40°F →300°F -20°F →220°F -15°F →375°F -10°F →250°F	
Fill Fluid:	Silicone Fluid Food Grade Silicone	-40°F →400°F -20°F →400°F	
Module Seal Stinger Fitting:	Brass	316 Stainless Steel	
Pipe Fittings:	Carbon Steel	316 Stainless Steel	
Pressure Range:	Vacuum to +1,000 psi	The Onyx Isolator ring has been tested by an independent lab to 1,500 psi.	

Benefits:

- Absolute immunity to clogging
- Available with either 150# or 300# hole pattern
- Integral snubber eliminates gauge fluctuations at no additional cost
- Instruments can be replaced without vacuum filling
- Immune to errors caused by ambient temperature fluctuations
- No tools required to change pressure instruments

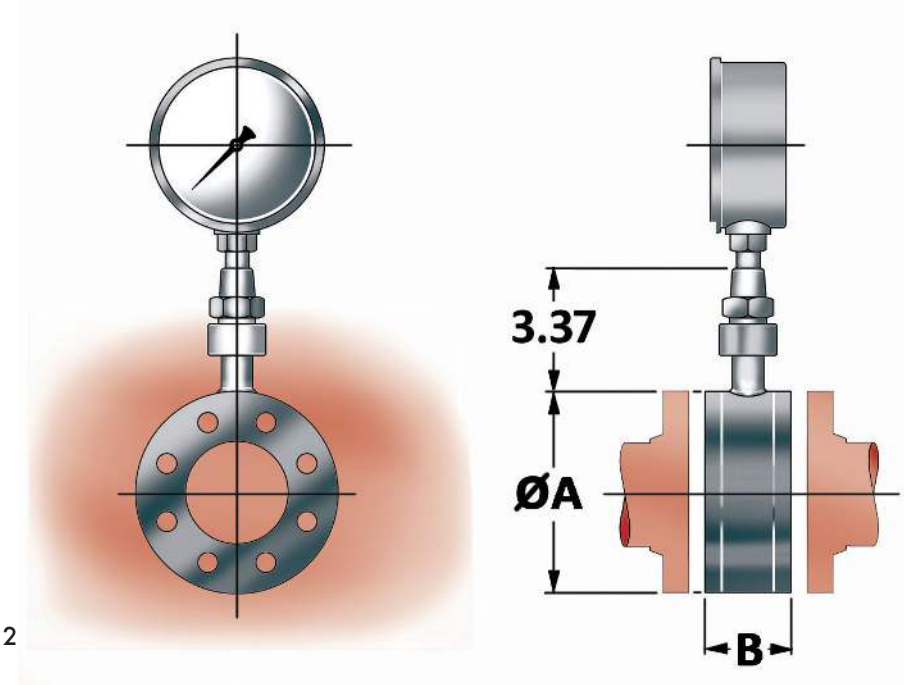

Size	ØA	B
1	4.25	1.87
1 ½	5.00	1.87
2	6.00	1.87
2 ½	7.00	1.87
3	7.50	1.87
4	9.00	2.12
5	10.00	2.25
6	11.00	2.25
8	13.50	2.25
10	16.00	2.81
12	19.00	3.12
14	21.00	3.12
16	23.50	3.12
18	25.00	3.12
20	27.50	3.12
24	32.00	3.12
30	38.75	3.12
36	41.12	4.00
42	53.00	4.00

PSS

The Onyx Isolator Ring provides a simple, method to measure pressure of slurries and corrosive fluids. The PSS series is compatible with threaded pipe connections.

Onyx ultra-deep vacuum filling insures the highest accuracy in the industry. The patented "Module Seal" - standard on all Onyx Isolator Rings - allows instruments to be or replaced or calibrated with minimum down time.



Materials of Construction

Center Section:	Carbon Steel	316 Stainless Steel	
End Plates: 316 Stainless Steel	Acetal Titanium	Kynar Carpenter-20	UHMW-PE
Elastomer: (Available with optional Teflon coatings)	Nitrile (Buna-N) EPDM (Nordel) Neoprene Viton Hypalon	-30°F →220°F -40°F →300°F -20°F →220°F -15°F →375°F -10°F →250°F	
Fill Fluid:	Silicone Fluid Food Grade Silicone	-40°F →400°F -20°F →400°F	
Module Seal Stinger Fitting:	Brass	316 Stainless Steel	
Pipe Fittings:	Carbon Steel	316 Stainless Steel	
Pressure Range:	Vacuum to 200 psi	The Onyx Isolator ring has been tested by an independent lab to 250 psi.	

Benefits:

- Low-Cost
- Superior accuracy compared to diaphragm seals
- Instruments can be replaced without removing the isolator ring from the pipe
- Immune to errors caused by ambient temperature fluctuations
- Integral snubber eliminates gauge fluctuations at no additional cost
- Silicone oil fill fluid is safe, non-toxic, non-corrosive, and stable from -40°F to +400°F

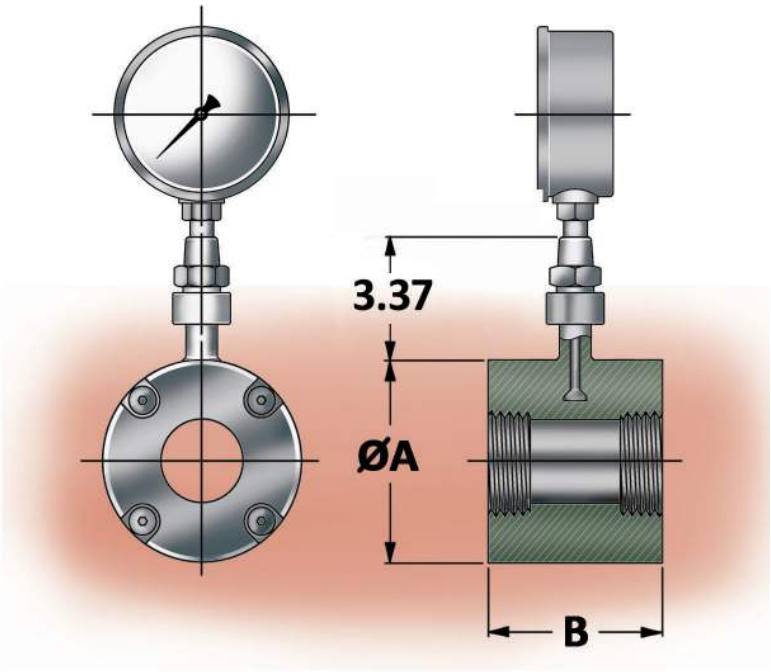

Size	ØA	B
1/2	2.50	2.87
3/4	2.50	2.87
1	2.50	3.37
1 ½	3.25	3.37
2	4.00	3.37
3	5.25	3.87
4	6.75	4.12

PSQ



The Onyx Isolator Ring provides a simple, method to measure pressure of slurries and corrosive fluids. The PSQ series is compatible with Tri-Clover pipe connections. Quick connection to Tri-Clover pipe provides accurate alignment and fast installation.

The inside diameter of the PSQ precisely matches sanitary pipe for smooth, unobstructed flow, self-cleaning operation, and minimum turbulence and friction. Onyx ultra-deep vacuum filling insures the highest accuracy in the industry. The patented "Module Seal" - standard on all Onyx Isolator Rings - allows instruments to be or replaced or calibrated with minimum down time.

Materials of Construction

Center Section:	316 Stainless Steel	
End Plates:	316 Stainless Steel	
Elastomer: (Available with optional Teflon coatings)	Nitrile (Buna-N) EPDM (Nordel) Viton White Neo	-30°F →220°F -40°F →300°F -15°F →375°F -20°F →220°F
Fill Fluid:	Silicone Fluid Vegatable Oil Food Grade Silicone	-40°F →400°F 0°F→250°F -20°F →400°F
Module Seal Stinger Fitting:	316 Stainless Steel	
Pipe Fittings:	316 Stainless Steel	
Pressure Range:	Vacuum to 150 psi	

Benefits:

- Absolute immunity to clogging
- Tri-Clover fittings allows for quick disconnect from piping system
- FDA Silicone oil fill fluid is safe, non-toxic, non-corrosive, and stable from -40°F to +400°F
- High displacement design can operate multiple instruments on one ring
- Ideal for brine, pickling solutions, tomato paste, chilies, mustard, pet food, and chocolate
- No tools required to change pressure instrument

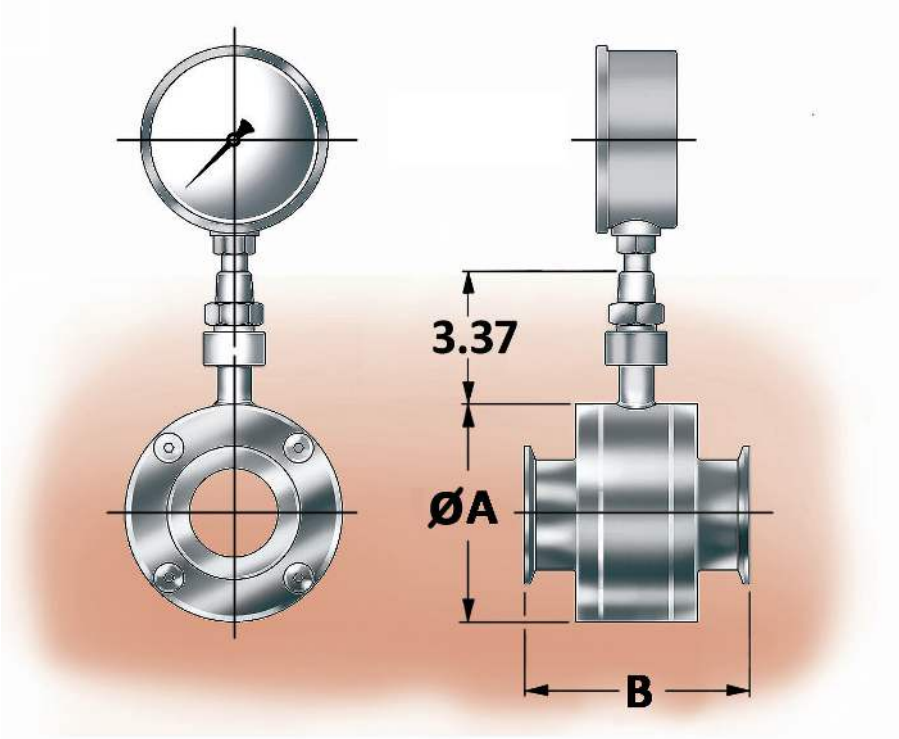

Size	ØA	B
1	3.25	4.12
1 ½	3.25	4.12
2	4.00	4.12
2 ½	4.75	4.12
3	5.25	4.12
4	6.75	4.12
6	8.62	4.12

Model K



The Onyx Model-K series diaphragm seal provides outstanding protection for pressure instruments against chemical attack and corrosion.

The exclusive convoluted rolling diaphragm design features:

- Compact design takes up little space and light weight
- High available displacement volume can drive multiple instruments with a single diaphragm seal, including instruments with large bourdon tubes or diaphragms.
- High system accuracy is assured by the combination of large surface area and ultra-low modulus of elasticity of the diaphragm element.
- Teflon-coated Viton diaphragm offers outstanding chemical compatibility with a wide variety of process fluids. Wetted materials of construction include 316-stainless steel, PVC, and Kynar for broad based chemical resistance.
- Optional Clamp-Ring design enables users to remove the pressure instruments with the top half of the diaphragm assembly without fill fluid loss or compromising the vacuum seal.
- Optional flush port is available for cleaning in place.

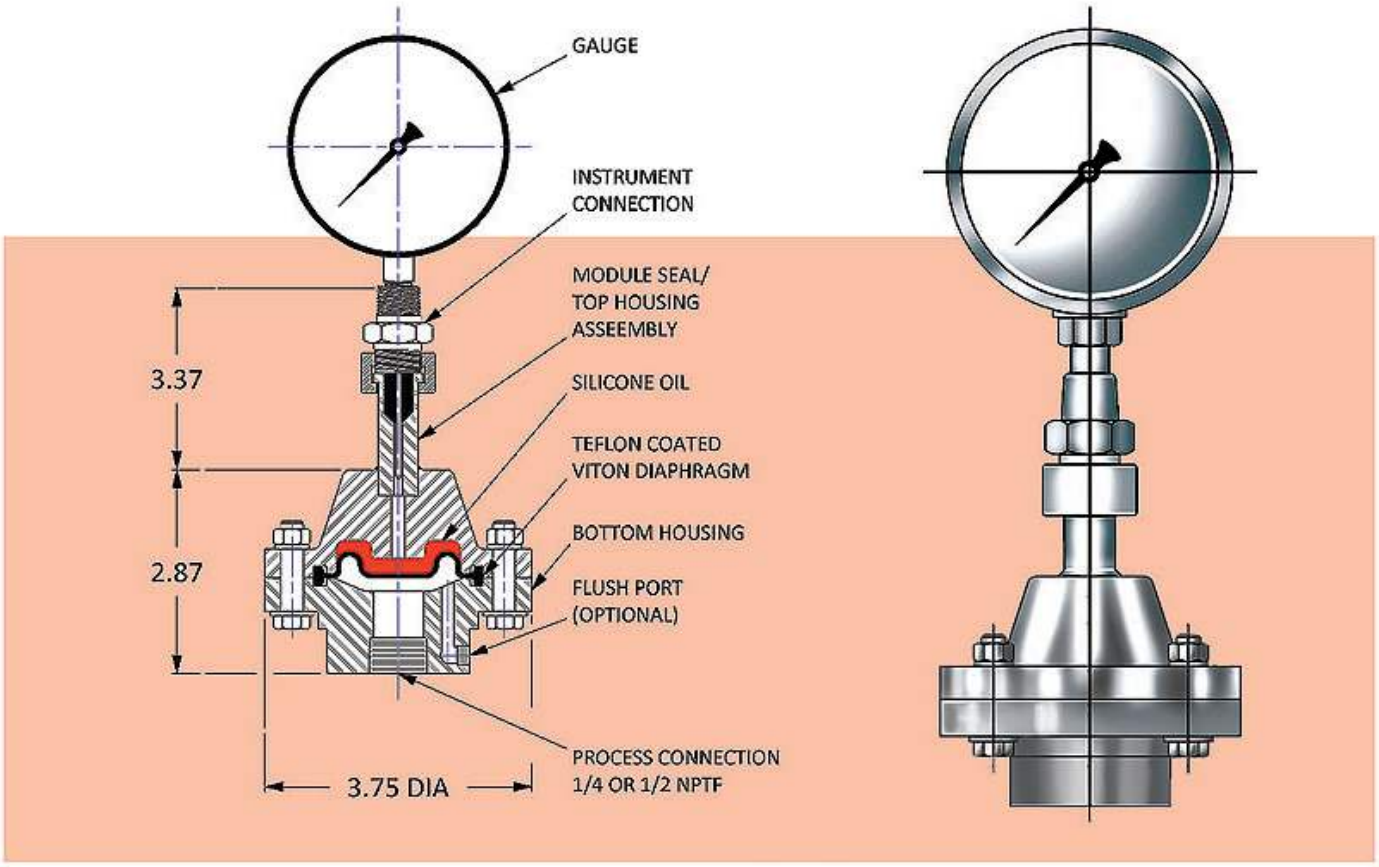

Smart Box-3

Smart Box-3 insures safe, reliable operation of **progressing cavity pumps**, protecting them from over-pressure, run-dry situations, or seal water failure.

This latest generation Smart Box is versatile, easy to install, easy to use, and compatible with either fixed speed or variable speed pumps.

The Smart Box-3 uses a solid state PLC and touch-screen for maximum reliability, eliminating wiring, mechanical push buttons, and lights. The touch-screen interface displays simple English text so pump status and fault conditions are easy to understand. It comes standard in a fiberglass weatherproof (NEMA-4X) enclosure, with optional stainless steel also available. It operates on 120-230 VAC power and includes its own internal DC power supply.

Working in combination with the Onyx Isolator Ring ensures reliable operation with abrasive slurries, viscous fluids, suspended solids, and corrosive liquids.

Our standard 2-point **solid state pressure switch** with digital readout is easier to set, more robust, and more accurate than traditional mechanical gauges and switches.

Smart Box-3 can be configured as a "Master" controller where all pump commands are routed through the Smart Box. Or, it can be a designated as a "slave" where it ties into the pump control circuit at a single point for simpler wiring.

The Smart Box can be configured to work as a Local Control Station, eliminating the need for an H-O-A (Hand-Off–Auto) switch or Reset button.

The Smart Box can turn seal flush water on and off, and can monitor seal water flow switch.



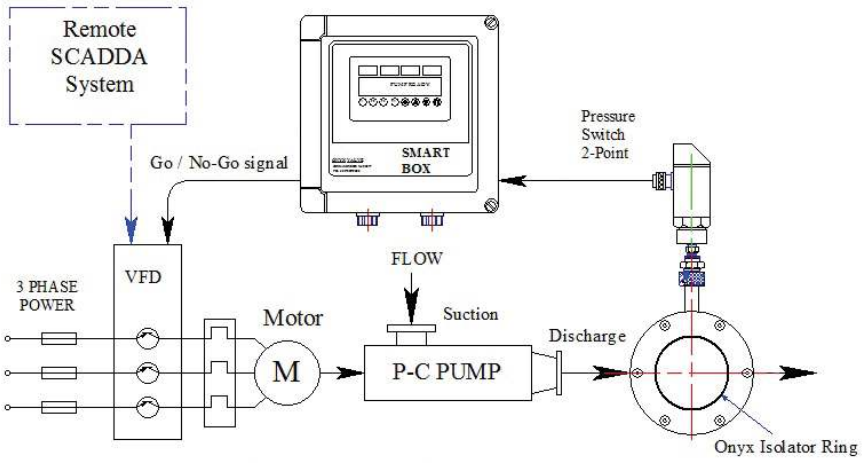

Smart Box General Arrangement
Closing the Loop



Onyx Valve Calibrating Machine



Onyx Valve Calibrating Machine provides a reliable method to calibrate gauges, switches, or transmitters originally supplied as integral components on Onyx Isolator Rings.

This rugged machine is light weight, completly portable, and requires no external power, making it the ideal companion for field service. It can generate any pressure from near full vacuum to +400 psi.

Calibrating instruments on a **conventional** isolator ring is virtually impossible: As soon as you break the fitting connections, you risk loosing fill fluid or getting air bubbles into the instrument. Air must be excluded because it will compress to a smaller volume under pressure. This forces the rubber sleeve to stretch, increasing the error in the gauge reading. Beyond a certain point the rubber reaches its limit and pressure indication ceases. Even a miniscule air bubble can adversely affect performance, leaving the pressure instrument worse off than before you attempted to calibrate it.

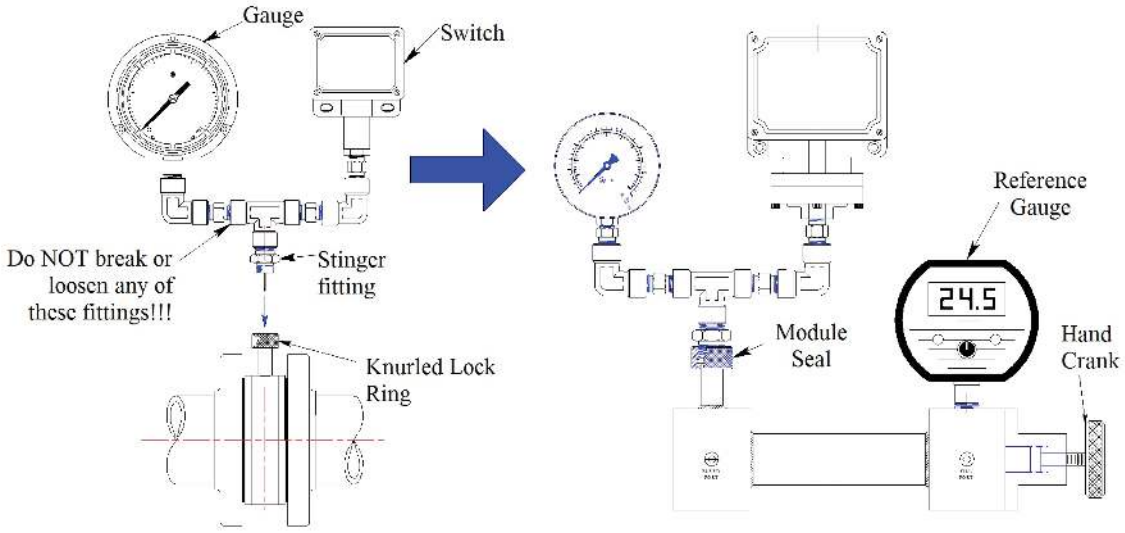

Onyx Isolator Ring

Onyx Calibrator Machine

The Onyx Calibrating Machine provides a simple means to circumvent this problem. The Onyx Calibrating Machine includes the patented Onyx Module Seal as the connection point for the instrument to be calibrated.

Gauges, pressure switches, transmitters, or any combination of these instruments can easily be temporarily removed from the Onyx Isolator Ring, attached to the calibration machine for verification, then put back on the isolator ring. To calibrate the instrument, simply turn the crank to build up the required pressure and compare the reading on the process instrument to the reference gauge.

The Calibrating Machine is available with a variety of reference gauges, either mechanical and electronic (battery powered), with analogue or digital readout, with accuracy equal to or better than ANSI class-3A, and tracability to NIST certificates are available.

The Onyx Syringe Kit



A simple method to prepare instruments for attaching to the Onyx Isolator Ring.

The problem: Any device that isolates pressure instruments from the process, such as a diaphragm seal or isolator ring, must be vacuum filled to work properly. If an air bubble becomes entrained inside the instrument assembly, it will collapse to a smaller volume under pressure. This causes a gross error in the pressure reading, or the instrument stops working altogether.

If a conventional isolator has a gauge, switch, or transmitter that has to be replaced for any reason, the normal procedure is to remove the entire ring and instrument assembly and transport them to a service center equipped with a vacuum filling facility. This leaves a gap in the process piping, effectively shutting down the entire process.

The Solution: The Onyx Syringe functions as a miniature vacuum pump and oil reservoir. Light weight and requiring no external power, this field service kit provides a simple method to vacuum fill gauges, switches, and transmitters in a matter of minutes, minimizing down time and eliminating the need to remove the isolator ring from the process pipe.



Simply remove the instrument from the isolator rings and turn the instrument assembly upside down and connect the syringe to the pressure instruments. The filling procedure is a simple 2-step process:

Pull up on the plunger to extract the air. Push down on the plunger to inject the instrument oil.

The transparent syringe body provides visual indication when all the air bubbles are extracted. This syringe can generate a vacuum equal to the highest grade of motor operated vacuum pumps, insuring that instrumentation prepared with this kit performs comparably to instruments shipped direct from the factory.

The Onyx Syringe Kit includes everything necessary to vacuum fill instruments or isolator rings, including a ¼ liter bottle of silicone instrument oil.

CAUTION:
NEVER ATTEMPT TO REFILL AN ISOLATOR RING UNDER PRESSSURE.

REFER TO THE INSTRUCTION MANUAL FOR DETAILED INSTRUCTIONS ON HOW TO SAFELY REFILL ISOLATOR RINGS IN THE FIELD.

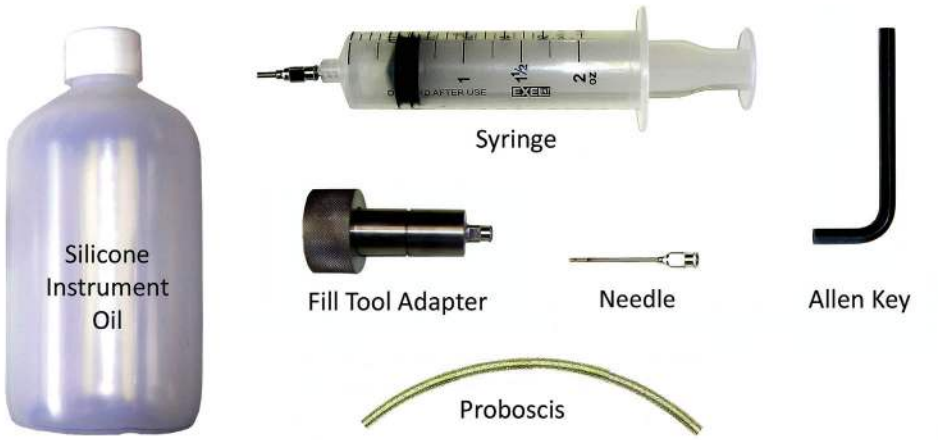

Onyx Instrumentation Manifolds



A-Configuration



B-Configuration



C-Configuration

Onyx Dual Mount Instrument Manifolds are the ideal way to mount two instruments on one isolator ring. Robust ½" NPT manifolds can support multiple heavy instruments including turret case gauges, switches, and transmitters. One-piece design minimizes potential leak paths. Made from 316-stainless steel. Available in three configurations shown above, there's an instrument manifold available for just about any combination of instruments imaginable.

Pressure Sensor Applications



Tank Level Detection and Control

Onyx Isolator rings function as level indicators in tank applications, with a typical accuracy better than ± 1-inch of water.

Available with a mechanical gauge for local level indication, or an electronic transmitter for integration into a distributed process control network.



Pump Performance Measurement

Onyx Isolator rings measure pump performance. Installing a sensor ring with gauge on pump suction and discharge provides simple, accurate measurement of T.D.H. (Total Dynamic Head).

T.D.H. is an accurate indicator of pump condition and efficiency, indicating required maintenance before a catastrophic failure.

ONYX VALVE

835 Industrial Hwy, Cinnaminson, NJ 08077

phone: 856-829-2888 | Fax: 856-829-3080 | onyxvalve.com

Onyx Valve can offer you not only the Pressure Sensors mentioned in this catalog but we also offer:



Automated Pinch Valves

Available with electric or pneumatic actuators. Drop-tight shutoff and precise positioning ability makes them ideal for on/off or modulating service. Available with a variety of optional accessories, these valves can be seamlessly integrated into your distributed control system.



Manual Pinch Valves

Available with standard hand wheel operators, bevel gears, or high efficiency ball screw jacks. These valves are also available with stem extensions for buried service.



Duckbill Check Valves

The ideal solution to tidal backflow prevention. Duckbill check valves are available in sizes ½" to 72", designed to slip in, slip over, or bolt directly to a pipe flange.

Distributed by Armour Valve

Phone: 1-800-268-3508

Email: sales@armourvalve.com

Website: armourvalve.com