RADPOL
PIPES

PRE-INSULATED
PIPELINE SYSTEMS



2024

Table of contents

About us . . . 2
Technical data of pre-insulated district heating network components . . . 3
PE casing pipes . . . 4
Pre-insulated HDPE-jacket pipes / UV-Protect Color jacket pipes / pipes with a diffusion barrier . . . 5
Pre-insulated SPIRO-jacket pipes . . . 6
Pre-insulated curved pipes with HDPE-jacket / with diffusion barrier . . . 7
Pre-insulated bends . . . 8
Pre-insulated bends . . . 9
Pre-insulated vertical bends . . . 10
Pre-insulated branch bends 45° . . . 11
Pre-insulated branch bends 90° . . . 11
Pre-insulated perpendicular T-branches . . . 12
Pre-insulated parallel T-branches . . . 14
Pre–insulated straight T–branches . . . 16
Top pre-insulated vents / Top pre-insulated drains . . . 18
Bottom pre-insulated vents / Top pre-insulated drains . . . 19
Pre-insulated DN25÷300 shut-off valves . . . 20
DN32 ÷ 300 pre-insulated shut-off vent valves . . . 21
Pre-insulated shut-off drain valves / Pre-insulated shut-off drain/vent valves . . . 22
Pre-insulated reduction . . . 23
Pre-insulated fixed points . . . 25
Pre-insulated compensators . . . 26
Type E disposable compensators . . . 27
Adapters . . . 28
HDPE collars . . . 29
Galvanized steel joint . . . 29
Heat-shrink radially cross-linked joint for pre-insulated district heating networks . . . 30
Composition of a heat-shrink radially cross-linked joint symbol . . . 31
Heat-shrink radially cross-linked joints . . . 32
Heat-shrink elbow joints . . . 33
Branch joints / Branch elbow joints . . . 34
Heat-shrink reducer joints . . . 35
Branch joints . . . 36
HDPE termination joints . . . 37
Protective cap . . . 37
Electrically welded joints . . . 38
Open joints . . . 39
Heat-shrink tapes with a reinforcing strip . . . 40
END-CAP REC . . . 41
END-CAP REC Z . . . 41
DN400÷1000 heat-shrink terminal gaskets . . . 42
Rubber sealing rings . . . 43
Warning tapes . . . 43
Blanking plugs . . . 44
Heat-shrink radially cross-linked joints installation tools . . . 44
Compensating cushions typ B PE . . . 45
Polyurethane foam components for filling joints . . . 46
Polyurethane foam components for filling reduction joints . . . 46
Polyurethane foam components for filling elbow joints . . . 46
Quantities of PUR foam components in packed sets . . . 47
Approximate quantity of components per 1 joint, Lw = 34 cm UNIT FOAMING – STANDARD INSULATION . . . 47
Approximate quantity of components per 1 joint, Lw = 34 cm UNIT FOAMING – PLUS INSULATION . . . 48
Approximate quantity of components per 1 joint, Lw = 34 cm UNIT FOAMING – 2×PLUS INSULATION . . . 48
Pulse alarm signaling components . . . 49
Pulse system – measuring equipment . . . 50
Resistance alarm signaling components . . . 52
Resistance system – measuring equipment . . . 53
Weight of pre-insulated pipes . . . 55

About us

RAPDOL PIPES sp. z o.o. is an innovative manufacturer and supplier of technologically advanced, complete pre-insulated piping systems (pipes, fittings, fixtures, radiation-crosslinked joints) for the transmission of media at continuous temperatures up to 120 °C conditionally up to 140°C acording to PN-EN13941-1 and working pressures up to 2.5 MPa. We offer efficient and environmentally friendly complete pre-insulated pipelines for underground and overhead heating networks, which can be used in various industries.

Pre-insulated pipes manufactured in our technology are installed in 6-, 12- and 16-meter sections, with a diameter ranging from DN 20 to DN 1000 mm. In the manufacturing process, we use welded and seamless steel carrier pipes, special steel pipes and copper and plastic pipes. Pre-insulated pipes and components are equipped with monitoring systems. Depending on the Customer's needs, we use the Brandes resistance alarm system or the Nordic pulse type system. Alarm systems allow to locate damage with an accuracy of up to 1 m on a network section of 1 km.

Apart from what is presented in the catalog, we offer:
- pre-insulated pipes for the transmission of process steam with a temperature up to 300 °C, with multi-layer insulation of an appropriate wall thickness
- pre-insulated pipes suitable for heating with heating cables, for transmitting process utilities, including oil derivative materials, sulfur and others, where transfers with constant parameters are required, even on multi-kilometer distances.

Our products are provided with the National Technical Assessment – ITB-KOT-2019/0824.

Additionally, we offer:
- preparation of technical designs of district heating networks in the RADPOL technology,
- static calculations of underground and overground district heating networks. During calculations, stress, elongation, natural expansion and bellows expansion joints are analyzed, and expansion zones (expansion pads) are selected,
- adaptations of designs made in other technologies,
- supervision over project implementation,
- training and consulting services for design engineers and contractors,
- complete pre-insulated systems with heating cables (resistance system or STS),
- maintenance services including connection of alarm systems, coupling and insulating connections on the construction site with the use of mobile units.

We ensure a high quality of the manufactured products, while respecting the requirements of environmental protection.

The environmental policy so designed is guaranteed by the implemented, maintained and continuously improved Integrated Management System compliant with the requirements of PN EN ISO 9001: 2009, PN EN ISO 14001: 2005.

PRZYJAZNE dla środowiska naturalnego

NARASTAJĄCE oszczędności

Euroheat & Power
GUIDELINES: EHP/001
CERTIFICATE: 1/30

SYSTEMES PRE-ISOLES
QB
80-013-2317 V1

ISOQAR REGISTERED
Nr Cert. 15557
ISO 9001
ISO 14001
ISO 45001





Technical data of pre-insulated district heating network components

1. Carrier pipe.

The steel carrier pipe meets the requirements of PN-EN 253.

- seamless steel pipes – made of P235GH grade steel with a quality as per PN-EN 10216-1, PN-EN 10216-2
- longitudinally or spirally welded steel pipes – made of P235GH grade steel with a quality as per PN-EN 102017-1, PN-EN 102017-2, PN-EN 102017-5,
- longitudinally welded galvanized steel pipes – made of P235GH or P235TR1, P235TR2 steel grade with a quality as per PN-EN 10217-1, PN-EN 10217-2 and PN-EN 10217-5, and a zinc coating with a quality as per PN-EN 10240.

2. Casing jacket. PN-EN 253 casing pipes.

	HDPE	SPIRO
Density, [kg/m^3]	> 944 kg/m^3	7850
Melt flow rate, MFR [g/10 min]	0,2<=MFR <=1,0	–
Linear expansion coefficient, λ [1/°C]	180 × 10^{-6}	12×10^{-6}
Yield point min., Rmin [MPa]	19	–
Heat conductivity coefficient, λ [W/mK]	0,43	58
Elongation at break	min. 350%	–
Breaking strength N/mm^2	–	490

3. Thermal insulation.

- As per PN-EN253.

4. Pre-insulated pipes.

- Pre-insulated pipes in the range of diameters DN20 ÷ DN1000 with a steel carrier pipe (made in accordance with PN-EN 253).

5. Pre-insulated elements.

Made in accordance with PN-EN 253 and PN-EN 448.

- Bends
- Reductions
- Perpendicular branches
- Parallel branches
- Fixed points
- Bellows expansion joints

6. Pre-insulated fittings.

Made in accordance with PN-EN 253, PN-EN 448, and PN-EN 488.

- Vents
- Drains
- Shut-off valves
- Shut-off vent valves
- Shut-off drain valves
- Shut-off drain-vent valves

7. Other pre-insulated network components.

Components made in accordance with PN-EN 253, PN-EN 448, and PN-EN 489.

- PE casing pipes
- Adapters
- HDPE collar
- Heat-shrink joints
- Terminal joints
- Electrically welded joints
- Rubber sealing rings
- Expansion pads
- Heat-shrink tapes
- Heat-shrink terminal gaskets
- PUR foam

8. Alarm system components.

The alarm systems comply with the requirements of the 14419 standard.

- Sensor conductors
- Return conductors
- Two-wire conductors
- Four-wire conductors
- Clamping ferrules
- Heat-shrink tubing
- Supports
- Connectors
- Junction boxes
- Metering boxes
- Metering equipment

PE casing pipes

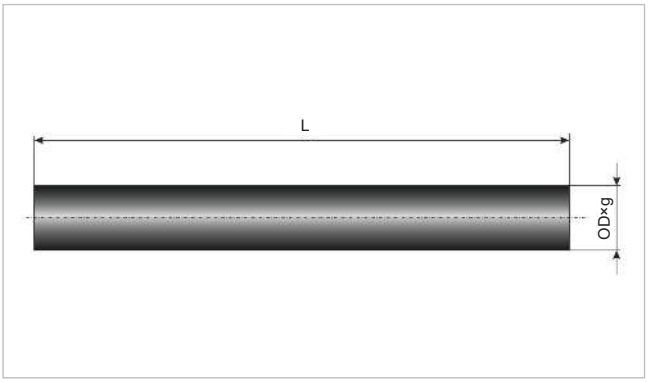



Material – high-quality polyethylene (HDPE)

DN	HDPE casing pipe		HDPE pipe weight
	OD [mm]	**g** [mm]	**~ W** [kg/m]
20; 25	90	3,0	0,80
32; 40	110	3,0	0,99
50	125	3,0	1,13
65	140	3,0	1,26
80	160	3,0	1,45
–	180	3,0	1,74
100	200	3,2	1,93
125	225	3,4	2,30
150	250	3,6	2,71
–	280	3,9	3,5
200	315	4,1	3,89
–	355	4,5	5,14
250	400	4,8	5,78
300	450	5,2	7,05
350	500	5,6	8,43
–	520	5,6	9,33
400	560	6,0	10,12
500	630	6,6	12,52
500	710	7,2	15,39
600	800	7,9	19,03
700	900	8,7	23,58
800	1000	9,4	28,31
900	1100	10,2	33,79
1000	1200	11,0	39,75

Polyethylene pipes are seamless, resistant to impact at temperatures above -20 °C and resistant to corrosion.
Length of casing pipes (L) as ordered by the customer.
Technical data of materials on page 3.
Other wall thickness not listed in the catalog – on request.

Pre-insulated HDPE-jacket pipes / UV-Protect Color jacket pipes with a diffusion barrier

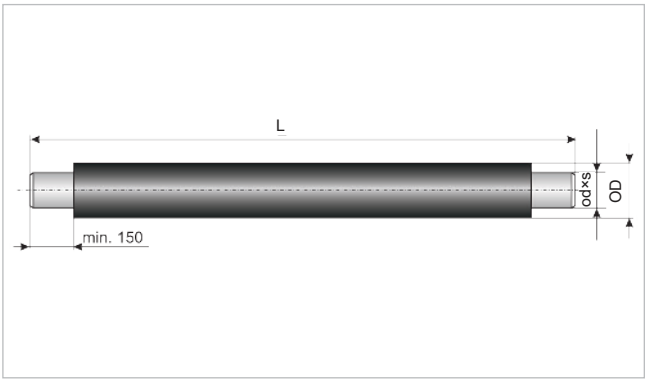



DN	od	Steel pipe			HDPE casing pipe			
		Seamless	Welded	Galvanized*	STANDARD insulation	PLUS insulation	2×PLUS insulation	Section length
	[mm]	s [mm]	s [mm]	s [mm]	OD [mm]	OD [mm]	OD [mm]	L [m]
20	26,9	2,6	2,6	2,6	90	110	125	6/12
25	33,7	2,6	2,6	2,6	90	110	125	6/12
32	42,4	2,9	2,9	2,9	110	125	140	6/12
40	48,3	2,9	2,9	2,9	110	125	140	6/12
50	60,3	2,9	2,9	3,2	125	140	160	6/12
65	76,1	2,9	2,9	3,2	140	160	200	6/12
80	88,9	3,2	3,2	3,6	160	200	225	6/12
100	114,3	3,6	3,6	3,6	200	225	250	6/12/16
125	139,7	4,0	3,6	–	225	250	315	6/12/16
150	168,3	4,5	4,0	–	250	315	400	6/12/16
200	219,1	6,3	4,5	–	315	400	450	6/12/16
250	273,0	7,1	5,0	–	400	450	500	6/12/16
300	323,9	7,1	5,6	–	450	500	560	6/12/16
350	355,6	8,0	5,6	–	500	560	630	6/12/16
400	406,4	8,8	6,3	–	560	630	710	6/12/16
450	457,0	8,8	6,3	–	630	710	800	6/12/16
500	508,0	11,0	6,3	–	630	710	800	6/12/16
600	610,0	–	7,1	–	800	900	1000	6/12/16
700	711,0	–	8,0	–	900	1000	–	6/12/16
800	813,0	–	8,8	–	1000	–	–	6/12/16
900	914,0	–	10,0	–	1100	–	–	6/12/16
1000	1016,0	–	11,0	–	1200	–	–	6/12

Pre-insulated pipes with lengths L = 6, 12, 16 m.
Untypical diameters and wall thicknesses not listed in the catalog – on request.
Technical data of materials on page 3.
HDPE-jacket available with diffusion barrier or UV-resistant Protect Color jacket (black, grey and blue – other color jacket compliant with RAL on request)

*available only in HDPE-jacket

Pre-insulated SPIRO-jacket pipes

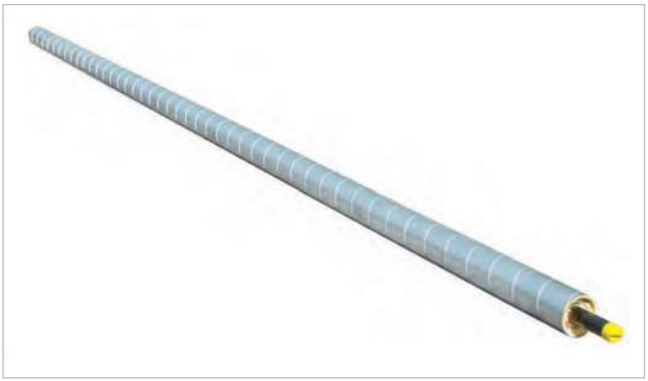

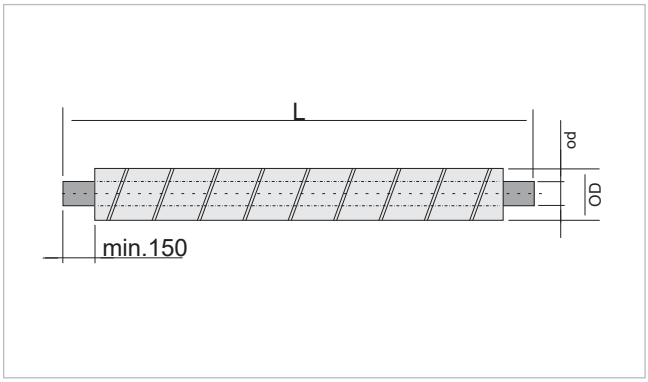

DN	Steel pipe			SPIRO casing pipe			2×PLUS insulation	Section length
	od	Seamless	Welded	Galvanized	STANDARD insulation	PLUS insulation		
	[mm]	s [mm]	s [mm]	s [mm]	OD [mm]	OD [mm]	OD [mm]	L [m]
20	26,9	2,9	2,9	2,9	100	100	125	6
25	33,7	2,9	2,9	2,9	100	100	125	6
32	42,4	3,2	3,2	3,2	125	125	160	6/12
40	48,3	3,2	3,2	3,2	125	125	160	6/12
50	60,3	3,2	3,2	3,2	125	160	160	6/12
65	76,1	3,2	3,2	3,2	160	160	200	6/12
80	88,9	3,2	3,2	3,6	160	200	225	6/12
100	114,3	3,6	3,6	3,6	200	225	250	6/12
125	139,7	4,0	3,6	–	225	250	315	6/12
150	168,3	4,5	4,0	–	250	315	400	6/12
200	219,1	6,3	4,5	–	315	400	450	6/12
250	273,0	7,1	5,0	–	400	450	500	6/12
300	323,9	7,1	5,6	–	450	500	560	6/12
350	355,6	8,0	5,6	–	500	560	630	6/12
400	406,4	8,8	6,3	–	560	630	710	6/12
450	457,1	8,8	6,3	–	630	710	800	6/12
500	508,0	11,0	6,3	–	630	710	900	6/12
600	610,0	–	7,1	–	800	900	1000	6/12
700	711,0	–	8,0	–	900	1000	–	6/12
800	813,0	–	8,8	–	1000	–	–	6/12
900	914,0	–	10,0	–	1120	–	–	6/12
1000	1016,0	–	11,0	–	1250	–	–	6/12

Pre-insulated pipes with lengths L = 6; 12 m.
On a standard basis, the SPIRO jacket is made of galvanized steel sheet.
Aluzinc acid-resistant jackets, untypical diameters and wall thicknesses not listed in the catalog – on request.
Technical data of materials on page 3.
Production to individual order, non-returnable.

Pre-insulated curved pipes with HDPE-jacket / with diffusion barrier



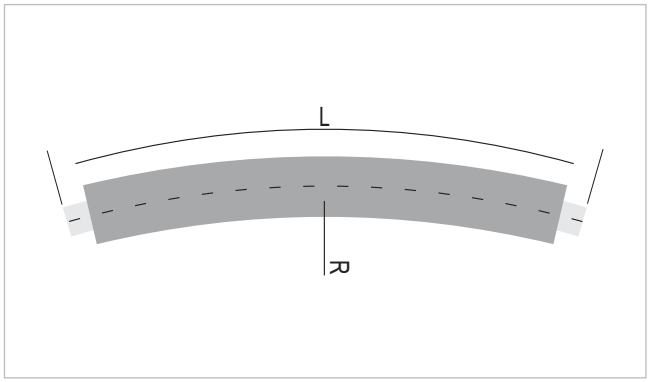

Steel pipe				Casing pipe with HDPE-jacket / with diffusion barrier			Minimum bend radius
DN	od [mm]	Seamless	Welded	Insulation	Maximum bend angle for a pipe with L=6m	Maximum bend angle for a pipe with L=12m	
		s [mm]	s [mm]	Dz [mm]	α [°]	α [°]	Rm [m]
20	26,9	2,9	2,9	90	in diameters	–	9,9
25	33,7	2,9	2,9	90	31	–	11,1
32	42,4	3,2	3,2	110	20	40	11,9
40	48,3	3,2	3,2	110	20	42	13,6
50	60,3	3,2	3,2	125	21	40	14,3
65	76,1	3,2	3,2	140	18	36	15,9
80	88,9	3,2	3,2	160	17	34	16,8
100	114,3	3,6	3,6	200	–	26	22,0
125	139,7	4,0	3,6	225	–	22	26,0
150	168,3	4,5	4,0	250	–	18	31,8
200	219,1	6,3	4,5	315	–	14	41,0
250	273,0	7,1	5,0	400	–	11	52,1
300	323,9	7,1	5,6	450	–	9	63,7
350	355,6	8,0	5,6	500	–	8	71,7
400	406,4	8,8	6,3	560	–	7	82,0
450	457,0	8,8	6,3	630	–	7	82,0
500	508,0	11,0	6,3	630	–	6	95,5

In the range of diameters DN20 – DN80, pipes are bent mechanically on the construction site.
When ordering, please specify the diameter, wall thickness, bend radius, bend angle and length of the section.
Other pipe thicknesses are available on request.
Production to individual order, non-returnable.

Pre-insulated bends



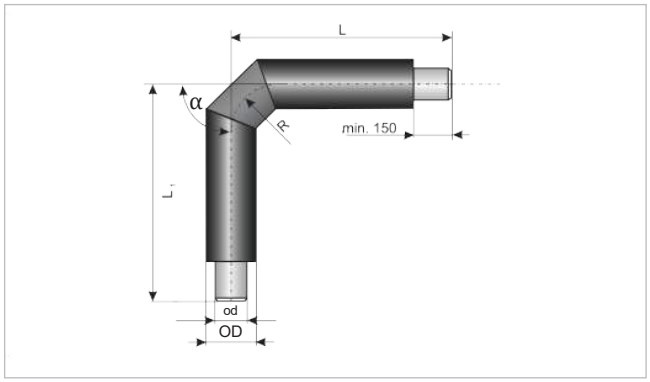

Steel pipe		HDPE casing pipe			Bend radius		Arm length	
DN	od	STANDARD insulation	PLUS insulation	2×PLUS insulation				
	[mm]	OD [mm]	OD [mm]	OD [mm]	R=3od [mm]	R=2,5od [mm]	L [mm]	L1 [mm]
20	26,9	90	110	125	80,7	–	1000/1500/2000*	1000/1500/2000*
25	33,7	90	110	125	101,1	–	1000/1500/2000*	1000/1500/2000*
32	42,4	110	125	140	127,2	–	1000/1500/2000*	1000/1500/2000*
40	48,3	110	125	140	144,9	–	1000/1500/2000*	1000/1500/2000*
50	60,3	125	140	160	180,9	–	1000/1500/2000*	1000/1500/2000*
65	76,1	140	160	200	228,3	–	1000/1500/2000*	1000/1500/2000*
80	88,9	160	200(180	225	266,7	–	1000/1500/2000*	1000/1500/2000*
100	114,3	200	225	250	342,9	–	1000/1500/2000*	1000/1500/2000*
125	139,7	225	250	315	419,1	–	1000/1500/2000*	1000/1500/2000*
150	168,3	250	315(280)	400	504,9	–	1000/1500/2000*	1000/1500/2000*
200	219,1	315	400(355)	450	–	547,8	1000/1500/2000	1000/1500/2000
250	273,0	400	450	500	–	682,5	1000/1500/2000	1000/1500/2000
300	323,9	450	500	560)	–	809,8	1500/2000	1500/2000
350	355,6	500	560(520)	630	–	889,0	1500/2000	1500/2000
400	406,4	560	630	710	–	1016,3	1500/2000	1500/2000
450	457,0	630	710	800	–	1122,0	1500/2000	1500/2000
500	508,0	630	710	800	–	1270,0	1500/2000	1500/2000

Typical angles $\alpha = 90°$, untypical angles $5° \leq \alpha \leq 90°$, on request.
Untypical diameters, wall thicknesses and bend radii not listed in the catalog – on request.
Diameter of the SPIRO casing jacket as per the table, page 6.
* The total length of the arms (L + L1) must not exceed 3 m

Pre-insulated bends



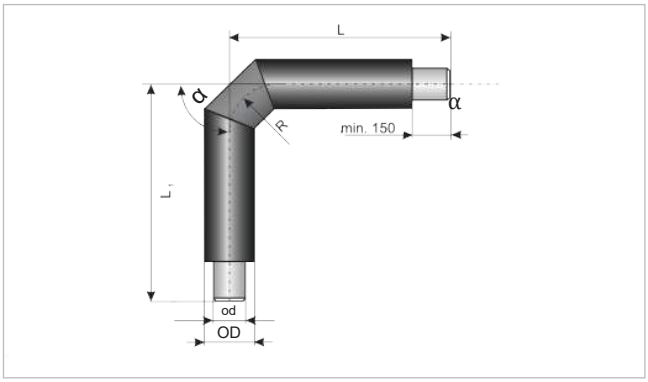

Steel pipe		HDPE casing pipe			Bend radius	Arm length	
DN	od	STANDARD insulation	PLUS insulation	2×PLUS insulation			
	[mm]	Dz [mm]	Dz [mm]	Dz [mm]	R=1,5od [mm]	L [mm]	L1 [mm]
125	139,7	225	250	315	209,6	1000/1500/2000	1000/1500/2000
150	168,3	250	315(280)	400	252,5	1000/1500/2000	1000/1500/2000
200	219,1	315	400(355)	450	328,6	1000/1500/2000	1000/1500/2000
250	273,0	400	450	500	409,5	1000/1500/2000	1000/1500/2000
300	323,9	450	500	560	485,8	1000/1500/2000	1000/1500/2000
350	355,6	500	560(520)	630	533,4	1000/1500/2000	1000/1500/2000
400	406,4	560	630	710	609,6	1000/1500/2000	1000/1500/2000
450	457,0	630	710	800	686,0	1000/1500/2000	1000/1500/2000
500	508,0	630	710	800	762,0	1500/2000	1500/2000
600	610,0	800	900	1000	915,0	1500/2000	1500/2000
700	711,0	900	1000	–	1066,5	1500/2000	1500/2000
800	813,0	1000	–	–	1219,5	1500/2000	1500/2000
900	914,0	1100	–	–	1371,0	2000/2000	2000/2000
1000	1016,0	1200	–	–	1524,0	2000/2000	2000/2000

Typical angles $\alpha = 90°$, untypical angles $5° \leq \alpha \leq 90°$, on request.
Untypical diameters, wall thicknesses and bend radii not listed in the catalog – on request.
Diameter of the SPIRO casing jacket as per the table, page 6.
* The total length of the arms (L + L1) must not exceed 3 m

Pre-insulated vertical bends



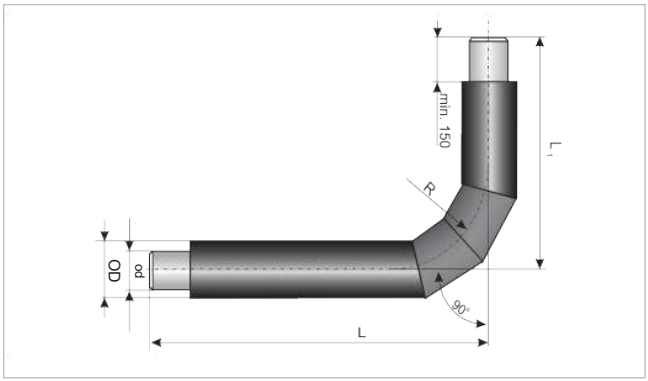

Steel pipe		HDPE casing pipe			Bend radius		Arm length	
DN	od	STANDARD insulation	PLUS insulation	2×PLUS insulation				
	[mm]	OD [mm]	OD [mm]	OD [mm]	R=3od [mm]	R=1,5od [mm]	L [mm]	L1 [mm]
20	26,9	90	110	125	80,7	–	1500/2000*	1500/2000*
25	33,7	90	110	125	101,1	–	1500/2000*	1500/2000*
32	42,4	110	125	140	127,2	–	1500/2000*	1500/2000*
40	48,3	110	125	140	144,9	–	1500/2000*	1500/2000*
50	60,3	125	140	160	180,9	–	1500/2000*	1500/2000*
65	76,1	140	160	200	228,3	–	1500/2000*	1500/2000*
80	88,9	160	200(180)	225	266,7	–	1500/2000*	1500/2000*
100	114,3	200	225	250	342,9	–	1500/2000*	1500/2000*
125	139,7	225	250	315	419,1	–	1500/2000*	1500/2000*
150	168,3	250	315(280)	400	504,9	–	1500/2000*	1500/2000*
200	219,1	315	400(355)	450	–	305,0	1500/2000	1500/2000
250	273,0	400	450	500	–	381,0	1500/2000	1500/2000

Typical angle = 90°.
Diameter of the SPIRO casing jacket as per the table, page 6.
Untypical diameters, wall thicknesses and bend radii not listed in the catalog – on request.

Pre-insulated branch bends 45°



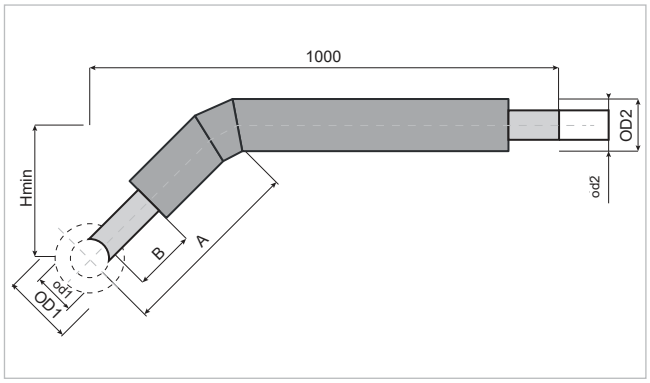

Notes:
Formulas for selection:
Hmin=0.5×(OD1+OD2) + 70 [mm]
A= √ 2×Hmin [mm]
B = 0.5 (OD1 – od1) + 75 [mm]
where:
OD1 – outer diameter of the main line casing pipe
OD2 – outer diameter of the branch casing pipe
od1 – outer diameter of the main line steel pipe
od2 – outer diameter of the branch steel pipe

Pre-insulated branch bends 90°



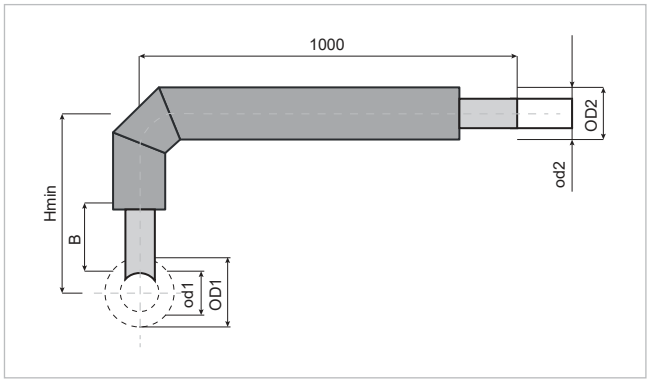

DN1	Hmin [mm]
20÷50	~300
65÷100	~370
125÷200	~485
250÷300	~510
350÷400	~760
500	~830
600	~1200

Formulas for selection:
B=0.5×(OD1 – od1)+75 [mm]
Hmin – height determined according to the table
where:
OD1 – outer diameter of the main line casing pipe
OD2 – outer diameter of the branch casing pipe
od1 – outer diameter of the main line steel pipe
od2 – outer diameter of the branch steel pipe

Pre-insulated perpendicular T-branches



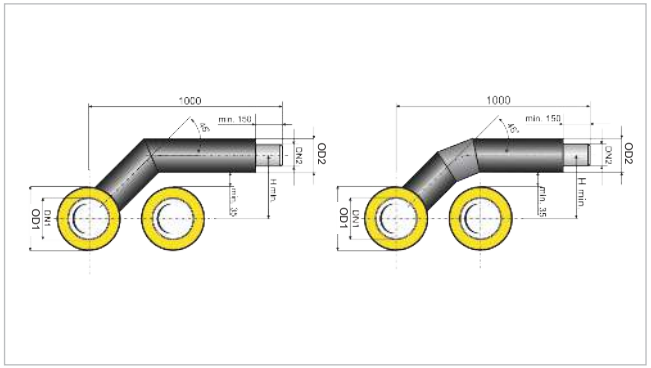

Main DN1 pipeline with a length of L1 = 1.5 lin. m
DN2 pipeline with a length of L2 = 1.0 lin. m
Hmin = 0.5 × (OD1 + OD2) + 70 [mm]

Perpendicular pre-insulated T-pipes in the STANDARD insulation

	DN2	20	25	32	40	50	65	80	100	125	150	200	250	300	350	400	500	600
DN1	OD1/OD2	90	90	110	110	125	140	160	200	225	250	315	400	450	500	560	630	800
20	90	✓	–	–	–	–	–	–	–	–	–	–	–	–	–	–	–	–
25	90	✓	✓	–	–	–	–	–	–	–	–	–	–	–	–	–	–	–
32	110	✓	✓	✓	–	–	–	–	–	–	–	–	–	–	–	–	–	–
40	110	✓	✓	✓	✓	–	–	–	–	–	–	–	–	–	–	–	–	–
50	125	✓	✓	✓	✓	✓	–	–	–	–	–	–	–	–	–	–	–	–
65	140	✓	✓	✓	✓	✓	✓	–	–	–	–	–	–	–	–	–	–	–
80	160	✓	✓	✓	✓	✓	✓	✓	–	–	–	–	–	–	–	–	–	–
100	200	✓	✓	✓	✓	✓	✓	✓	✓	–	–	–	–	–	–	–	–	–
125	225	✓	✓	✓	✓	✓	✓	✓	✓	✓	–	–	–	–	–	–	–	–
150	250	–	✓	✓	✓	✓	✓	✓	✓	✓	✓	–	–	–	–	–	–	–
200	315	–	–	✓	✓	✓	✓	✓	✓	✓	✓	✓	–	–	–	–	–	–
250	400	–	–	–	✓	✓	✓	✓	✓	✓	✓	✓	✓	–	–	–	–	–
300	450	–	–	–	–	✓	✓	✓	✓	✓	✓	✓	✓	✓	–	–	–	–
350	500	–	–	–	–	–	✓	✓	✓	✓	✓	✓	✓	✓	✓	–	–	–
400	560	–	–	–	–	–	✓	✓	✓	✓	✓	✓	✓	✓	✓	✓	–	–
450	630						–	–	✓	✓	✓	✓	✓	✓	✓	✓		
500	630	–	–	–	–	–	–	–	–	–	✓	✓	✓	✓	✓	✓	✓	–
600	800	–	–	–	–	–	–	–	–	–	✓	✓	✓	✓	✓	✓	✓	✓
700	900	–	–	–	–	–	–	–	–	–	✓	✓	✓	✓	✓	✓	✓	✓

Diameter of the SPIRO casing jacket as per the table, page 6.
On request - other diameters, T-pipes with a pulled neck on steel and HDPE jacket and forger T-pipes.
Standard is a direct welding with a reinforcing cap.

Perpendicular pre-insulated T-pipes in the PLUS insulation

	DN2	20	25	32	40	50	65	80	100	125	150	200	250	300	350	400	500	600	600
DN1	OD1/OD2	110	110	125	125	140	160	200	200	250	315	400	450	500	560	630	710	800	900
20	110	✓	–	–	–	–	–	–	–	–	–	–	–	–	–	–	–	–	–
25	110	✓	✓	–	–	–	–	–	–	–	–	–	–	–	–	–	–	–	–
32	125	✓	✓	✓	–	–	–	–	–	–	–	–	–	–	–	–	–	–	–
40	125	✓	✓	✓	✓	–	–	–	–	–	–	–	–	–	–	–	–	–	–
50	140	✓	✓	✓	✓	✓	–	–	–	–	–	–	–	–	–	–	–	–	–
65	160	✓	✓	✓	✓	✓	✓	–	–	–	–	–	–	–	–	–	–	–	–
80	200	✓	✓	✓	✓	✓	✓	✓	–	–	–	–	–	–	–	–	–	–	–
100	225	✓	✓	✓	✓	✓	✓	✓	✓	–	–	–	–	–	–	–	–	–	–
125	250	✓	✓	✓	✓	✓	✓	✓	✓	✓	–	–	–	–	–	–	–	–	–
150	315	–	✓	✓	✓	✓	✓	✓	✓	✓	✓	–	–	–	–	–	–	–	–
200	400	–	–	✓	✓	✓	✓	✓	✓	✓	✓	✓	–	–	–	–	–	–	–
250	450	–	–	–	✓	✓	✓	✓	✓	✓	✓	✓	✓	–	–	–	–	–	–
300	500	–	–	–	–	✓	✓	✓	✓	✓	✓	✓	✓	✓	–	–	–	–	–
350	560	–	–	–	–	–	✓	✓	✓	✓	✓	✓	✓	✓	✓	–	–	–	–
400	630	–	–	–	–	–	✓	✓	✓	✓	✓	✓	✓	✓	✓	✓	–	–	–
450	710	–	–	–	–	–	–	–	✓	✓	✓	✓	✓	✓	✓	✓	–	–	–
500	710	–	–	–	–	–	–	–	–	–	✓	✓	✓	✓	✓	✓	✓	–	
600	900	–	–	–	–	–	–	–	–	–	✓	✓	✓	✓	✓	✓	✓	✓	✓

Perpendicular pre-insulated T-pipes in the 2×PLUS insulation

	DN2	20	25	32	40	50	65	80	100	125	150	200	250	300	350	400	500	600
DN1	OD1/OD2	125	125	140	140	160	200	225	250	315	400	450	500	560	630	710	800	1000
20	125	➲	–	–	–	–	–	–	–	–	–	–	–	–	–	–	–	–
25	125	✓	✓	–	–	–	–	–	–	–	–	–	–	–	–	–	–	–
32	140	✓	✓	✓	–	–	–	–	–	–	–	–	–	–	–	–	–	–
40	140	✓	✓	✓	✓	–	–	–	–	–	–	–	–	–	–	–	–	–
50	160	✓	✓	✓	✓	✓	–	–	–	–	–	–	–	–	–	–	–	–
65	200	✓	✓	✓	✓	✓	✓	–	–	–	–	–	–	–	–	–	–	–
80	225	✓	✓	✓	✓	✓	✓	✓	–	–	–	–	–	–	–	–	–	–
100	250	✓	✓	✓	✓	✓	✓	✓	✓	–	–	–	–	–	–	–	–	–
125	315	✓	✓	✓	✓	✓	✓	✓	✓	✓	–	–	–	–	–	–	–	–
150	400	–	✓	✓	✓	✓	✓	✓	✓	✓	✓	–	–	–	–	–	–	–
200	450	–	–	✓	✓	✓	✓	✓	✓	✓	✓	✓	–	–	–	–	–	–
250	500	–	–	–	✓	✓	✓	✓	✓	✓	✓	✓	✓	–	–	–	–	–
300	560	–	–	–	–	✓	✓	✓	✓	✓	✓	✓	✓	✓	–	–	–	–
350	630	–	–	–	–	–	✓	✓	✓	✓	✓	✓	✓	✓	✓	–	–	–
400	710	–	–	–	–	–	✓	✓	✓	✓	✓	✓	✓	✓	✓	✓	–	–
450	800	–	–	–	–	–	–	–	✓	✓	✓	✓	✓	✓	✓	✓	–	–
500	800	–	–	–	–	–	–	–	–	–	✓	✓	✓	✓	✓	✓	✓	–
600	1000	–	–	–	–	–	–	–	–	–	✓	✓	✓	✓	✓	✓	✓	✓

Pre-insulated parallel T-branches



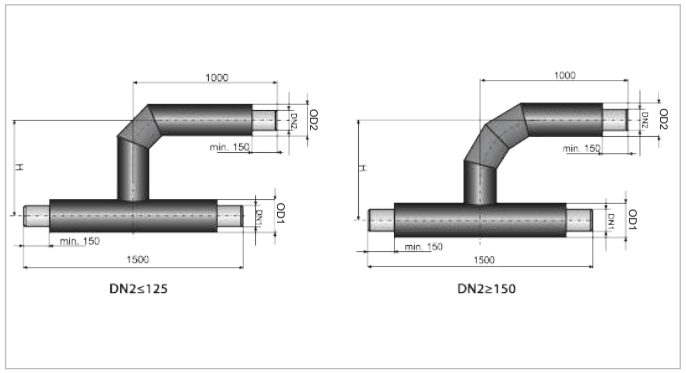

DN1/H	STANDARD insulation	PLUS insulation	2×PLUS insulation
20÷50	~300	~320	~320
65÷100	~370	~400	~420
125÷200	~485	~550	~620
250÷300	~510	~570	~630
350÷400	~760	~710	~860
500	~830	~900	~1050
600	~1200	~1300	~1450
700	~1400	~1500	~1600

Parallel pre-insulated T-pipes in the STANDARD insulation

DN1	DN2 OD1/OD2	20 90	25 90	32 110	40 110	50 125	65 140	80 160	100 200	125 225	150 250	200 315	250 400	300 450	350 500	400 560	500 630	600 800
20	90	✓	–	–	–	–	–	–	–	–	–	–	–	–	–	–	–	–
25	90	✓	✓	–	–	–	–	–	–	–	–	–	–	–	–	–	–	–
32	110	✓	✓	✓	–	–	–	–	–	–	–	–	–	–	–	–	–	–
40	110	✓	✓	✓	✓	–	–	–	–	–	–	–	–	–	–	–	–	–
50	125	✓	✓	✓	✓	✓	–	–	–	–	–	–	–	–	–	–	–	–
65	140	✓	✓	✓	✓	✓	✓	–	–	–	–	–	–	–	–	–	–	–
80	160	✓	✓	✓	✓	✓	✓	✓	–	–	–	–	–	–	–	–	–	–
100	200	✓	✓	✓	✓	✓	✓	✓	✓	–	–	–	–	–	–	–	–	–
125	225	✓	✓	✓	✓	✓	✓	✓	✓	✓	–	–	–	–	–	–	–	–
150	250	–	✓	✓	✓	✓	✓	✓	✓	✓	✓	–	–	–	–	–	–	–
200	315	–	–	✓	✓	✓	✓	✓	✓	✓	✓	✓	–	–	–	–	–	–
250	400	–	–	–	✓	✓	✓	✓	✓	✓	✓	✓	✓	–	–	–	–	–
300	450	–	–	–	–	✓	✓	✓	✓	✓	✓	✓	✓	✓	–	–	–	–
350	500	–	–	–	–	–	✓	✓	✓	✓	✓	✓	✓	✓	✓	–	–	–
400	560 (520)	–	–	–	–	–	✓	✓	✓	✓	✓	✓	✓	✓	✓	✓	–	–
450	630	–	–	–	–	–	–	–	✓	✓	✓	✓	✓	✓	✓	✓	–	–
500	630	–	–	–	–	–	–	–	–	–	✓	✓	✓	✓	✓	✓	✓	–
600	800	–	–	–	–	–	–	–	–	–	✓	✓	✓	✓	✓	✓	✓	✓
700	900	–	–	–	–	–	–	–	–	–	✓	✓	✓	✓	✓	✓	✓	✓

Diameter of the SPIRO casing jacket as per the table, page 6.
On request - other diameters, T-pipes with a pulled neck on steel and HDPE jacket.
Standard is a direct welding with a reinforcing cap.

Parallel pre-insulated T-pipes in the PLUS insulation

	DN2	20	25	32	40	50	65	80	100	125	150	200	250	300	350	400	500	600
DN1	OD1/OD2	110	110	125	125	140	160	200	225	250	315	400	450	500	560	630	710	900
20	110	✓	–	–	–	–	–	–	–	–	–	–	–	–	–	–	–	–
25	110	✓	✓	–	–	–	–	–	–	–	–	–	–	–	–	–	–	–
32	125	✓	✓	✓	–	–	–	–	–	–	–	–	–	–	–	–	–	–
40	125	✓	✓	✓	✓	–	–	–	–	–	–	–	–	–	–	–	–	–
50	140	✓	✓	✓	✓	✓	–	–	–	–	–	–	–	–	–	–	–	–
65	160	✓	✓	✓	✓	✓	✓	–	–	–	–	–	–	–	–	–	–	–
80	200 (180)	✓	✓	✓	✓	✓	✓	✓	–	–	–	–	–	–	–	–	–	–
100	225	✓	✓	✓	✓	✓	✓	✓	✓	–	–	–	–	–	–	–	–	–
125	250	✓	✓	✓	✓	✓	✓	✓	✓	✓	–	–	–	–	–	–	–	–
150	315 (280)	–	✓	✓	✓	✓	✓	✓	✓	✓	✓	✓	–	–	–	–	–	–
200	400 (355)	–	–	✓	✓	✓	✓	✓	✓	✓	✓	✓	–	–	–	–	–	–
250	450	–	–	–	✓	✓	✓	✓	✓	✓	✓	✓	✓	–	–	–	–	–
300	500	–	–	–	–	✓	✓	✓	✓	✓	✓	✓	✓	✓	–	–	–	–
350	560 (520)	–	–	–	–	–	✓	✓	✓	✓	✓	✓	✓	✓	✓	–	–	–
400	630	–	–	–	–	–	✓	✓	✓	✓	✓	✓	✓	✓	✓	✓	–	–
500	710	–	–	–	–	–	–	–	–	–	✓	✓	✓	✓	✓	✓	✓	–
600	900	–	–	–	–	–	–	–	–	–	✓	✓	✓	✓	✓	✓	✓	✓

Parallel pre-insulated T-pipes in the2×PLUS insulation

	DN2	20	25	32	40	50	65	80	100	125	150	200	250	300	350	400	500	600
DN1	OD1/OD2	125	125	140	140	160	200	225	250	315	400	450	500	560	630	710	800	1000
20	125	✓	–	–	–	–	–	–	–	–	–	–	–	–	–	–	–	–
25	125	✓	✓	–	–	–	–	–	–	–	–	–	–	–	–	–	–	–
32	140	✓	✓	✓	–	–	–	–	–	–	–	–	–	–	–	–	–	–
40	140	✓	✓	✓	✓	–	–	–	–	–	–	–	–	–	–	–	–	–
50	160	✓	✓	✓	✓	✓	–	–	–	–	–	–	–	–	–	–	–	–
65	200	✓	✓	✓	✓	✓	✓	–	–	–	–	–	–	–	–	–	–	–
80	225	✓	✓	✓	✓	✓	✓	✓	–	–	–	–	–	–	–	–	–	–
100	250	✓	✓	✓	✓	✓	✓	✓	✓	–	–	–	–	–	–	–	–	–
125	315	✓	✓	✓	✓	✓	✓	✓	✓	✓	–	–	–	–	–	–	–	–
150	400	–	✓	✓	✓	✓	✓	✓	✓	✓	✓	–	–	–	–	–	–	–
200	450	–	–	✓	✓	✓	✓	✓	✓	✓	✓	✓	–	–	–	–	–	–
250	500	–	–	–	✓	✓	✓	✓	✓	✓	✓	✓	✓	–	–	–	–	–
300	560	–	–	–	–	✓	✓	✓	✓	✓	✓	✓	✓	✓	–	–	–	–
350	630	–	–	–	–	–	✓	✓	✓	✓	✓	✓	✓	✓	✓	–	–	–
400	710	–	–	–	–	–	✓	✓	✓	✓	✓	✓	✓	✓	✓	✓	–	–
450	800	–	–	–	–	–	–	–	✓	✓	✓	✓	✓	✓	✓	✓	–	–
500	800	–	–	–	–	–	–	–	–	–	✓	✓	✓	✓	✓	✓	✓	–
600	1000	–	–	–	–	–	–	–	–	–	✓	✓	✓	✓	✓	✓	✓	✓

Parallel pre-insulated branches for DN 800 ÷ 1000, customized solution.

Pre–insulated straight T–branches

On a standard basis, dimensions of pre-insulated straight T-branches are 1,5×1,0 m.
Other dimensions and diameters on request.



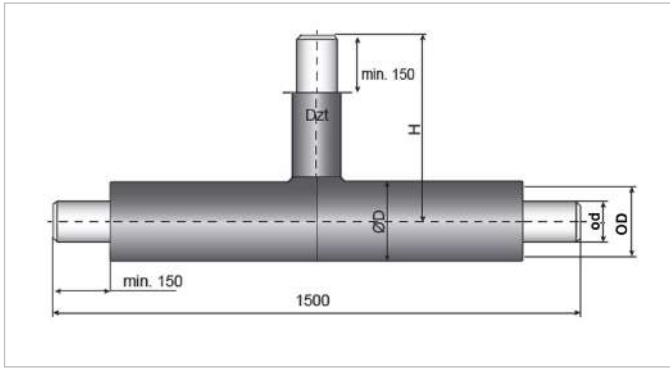

Standard Insulation

DN1	DN2 OD1/OD2	20 90	25 90	32 110	40 110	50 125	65 140	80 160	100 200	125 225	150 250	200 315	250 400	300 450	350 500	400 560	450 630	500 630	600 800
20	90	✓	–	–	–	–	–	–	–	–	–	–	–	–	–	–	–	–	–
25	90	✓	✓	–	–	–	–	–	–	–	–	–	–	–	–	–	–	–	–
32	110	✓	✓	✓	–	–	–	–	–	–	–	–	–	–	–	–	–	–	–
40	110	✓	✓	✓	✓	–	–	–	–	–	–	–	–	–	–	–	–	–	–
50	125	✓	✓	✓	✓	✓	–	–	–	–	–	–	–	–	–	–	–	–	–
65	140	✓	✓	✓	✓	✓	✓	–	–	–	–	–	–	–	–	–	–	–	–
80	160	✓	✓	✓	✓	✓	✓	✓	–	–	–	–	–	–	–	–	–	–	–
100	200	✓	✓	✓	✓	✓	✓	✓	✓	–	–	–	–	–	–	–	–	–	–
125	225	✓	✓	✓	✓	✓	✓	✓	✓	✓	–	–	–	–	–	–	–	–	–
150	250	–	✓	✓	✓	✓	✓	✓	✓	✓	✓	–	–	–	–	–	–	–	–
200	315	–	–	✓	✓	✓	✓	✓	✓	✓	✓	✓	–	–	–	–	–	–	–
250	400	–	–	–	✓	✓	✓	✓	✓	✓	✓	✓	✓	–	–	–	–	–	–
300	450	–	–	–	–	✓	✓	✓	✓	✓	✓	✓	✓	✓	–	–	–	–	–
350	500	–	–	–	–	–	✓	✓	✓	✓	✓	✓	✓	✓	✓	–	–	–	–
400	560	–	–	–	–	–	✓	✓	✓	✓	✓	✓	✓	✓	✓	✓	–	–	–
450	630						–	–	✓	✓	✓	✓	✓	✓	✓	✓	✓	–	–
500	630	–	–	–	–	–	–	–	–	–	✓	✓	✓	✓	✓	✓	✓	✓	–
600	800	–	–	–	–	–	–	–	–	–	✓	✓	✓	✓	✓	✓	✓	✓	✓

Plus Insulation

	DN2	20	25	32	40	50	65	80	100	125	150	200	250	300	350	400	450	500	600
DN1	OD1/OD2	110	110	125	125	140	160	200	200	250	315	400	450	500	560	630	710	710	900
20	110	✓	–	–	–	–	–	–	–	–	–	–	–	–	–	–	–	–	–
25	110	✓	✓	–	–	–	–	–	–	–	–	–	–	–	–	–	–	–	–
32	125	✓	✓	✓	–	–	–	–	–	–	–	–	–	–	–	–	–	–	–
40	125	✓	✓	✓	✓	–	–	–	–	–	–	–	–	–	–	–	–	–	–
50	140	✓	✓	✓	✓	✓	–	–	–	–	–	–	–	–	–	–	–	–	–
65	160	✓	✓	✓	✓	✓	✓	–	–	–	–	–	–	–	–	–	–	–	–
80	200	✓	✓	✓	✓	✓	✓	✓	–	–	–	–	–	–	–	–	–	–	–
100	225	✓	✓	✓	✓	✓	✓	✓	✓	–	–	–	–	–	–	–	–	–	–
125	250	✓	✓	✓	✓	✓	✓	✓	✓	✓	–	–	–	–	–	–	–	–	–
150	315	–	✓	✓	✓	✓	✓	✓	✓	✓	✓	–	–	–	–	–	–	–	–
200	400	–	–	✓	✓	✓	✓	✓	✓	✓	✓	✓	–	–	–	–	–	–	–
250	450	–	–	–	✓	✓	✓	✓	✓	✓	✓	✓	✓	–	–	–	–	–	–
300	500	–	–	–	–	✓	✓	✓	✓	✓	✓	✓	✓	✓	–	–	–	–	–
350	560	–	–	–	–	–	✓	✓	✓	✓	✓	✓	✓	✓	✓	–	–	–	–
400	630	–	–	–	–	–	✓	✓	✓	✓	✓	✓	✓	✓	✓	✓	–	–	–
450	710	–	–	–	–	–	–	–	✓	✓	✓	✓	✓	✓	✓	✓	✓	–	–
500	710	–	–	–	–	–	–	–	–	–	✓	✓	✓	✓	✓	✓	✓	✓	–
600	900	–	–	–	–	–	–	–	–	–	✓	✓	✓	✓	✓	✓	✓	✓	✓

2×Plus insulation

	DN2	20	25	32	40	50	65	80	100	125	150	200	250	300	350	400	450	500	600
DN1	OD1/OD2	125	125	140	140	160	200	225	250	315	400	450	500	560	630	710	800	800	1000
20	110	✓	–	–	–	–	–	–	–	–	–	–	–	–	–	–	–	–	–
25	110	✓	✓	–	–	–	–	–	–	–	–	–	–	–	–	–	–	–	–
32	125	✓	✓	✓	–	–	–	–	–	–	–	–	–	–	–	–	–	–	–
40	125	✓	✓	✓	✓	–	–	–	–	–	–	–	–	–	–	–	–	–	–
50	140	✓	✓	✓	✓	✓	–	–	–	–	–	–	–	–	–	–	–	–	–
65	160	✓	✓	✓	✓	✓	✓	–	–	–	–	–	–	–	–	–	–	–	–
80	200	✓	✓	✓	✓	✓	✓	✓	–	–	–	–	–	–	–	–	–	–	–
100	225	✓	✓	✓	✓	✓	✓	✓	✓	–	–	–	–	–	–	–	–	–	–
125	250	✓	✓	✓	✓	✓	✓	✓	✓	✓	–	–	–	–	–	–	–	–	–
150	315	–	✓	✓	✓	✓	✓	✓	✓	✓	✓	–	–	–	–	–	–	–	–
200	400	–	–	✓	✓	✓	✓	✓	✓	✓	✓	✓	–	–	–	–	–	–	–
250	450	–	–	–	✓	✓	✓	✓	✓	✓	✓	✓	✓	–	–	–	–	–	–
300	500	–	–	–	–	✓	✓	✓	✓	✓	✓	✓	✓	✓	–	–	–	–	–
350	560	–	–	–	–	–	✓	✓	✓	✓	✓	✓	✓	✓	✓	–	–	–	–
400	630	–	–	–	–	–	✓	✓	✓	✓	✓	✓	✓	✓	✓	✓	–	–	–
450	710	–	–	–	–	–	–	–	✓	✓	✓	✓	✓	✓	✓	✓	✓	–	–
500	710	–	–	–	–	–	–	–	–	–	✓	✓	✓	✓	✓	✓	✓	✓	–
600	900	–	–	–	–	–	–	–	–	–	✓	✓	✓	✓	✓	✓	✓	✓	✓

Top pre-insulated vents / Top pre-insulated drains



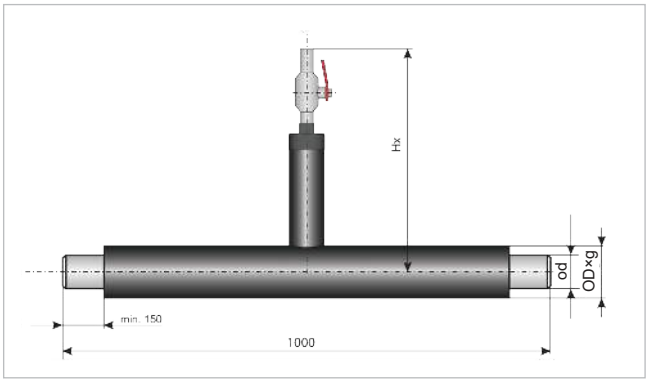

Steel pipe		HDPE casing pipe			Nominal drain meter	Nominal vent diameter	Height
DN	Outer pipe diameter od [mm]	STANDARD insulation OD [mm]	PLUS insulation OD [mm]	2×PLUS insulation OD [mm]	DN	DN	Hx [mm]
32	42,4	110	125	140	25	25	450
40	48,3	110	125	140	25	25	450
50	60,3	125	140	160	32	25	460
65	76,1	140	160	200	32	25	470
80	88,9	160	200	225	32	25	480
100	114,3	200	225	250	32	25	500
125	139,7	225	250	315	50	25	510
150	168,3	250	315	400	50	25	520
200	219,1	315	400	450	50	25	550
250	273,0	400	450	500	65	25	600
300	323,9	450	500	560	65	25	620
350	355,6	500	560	630	80	25	650
400	406,4	560	630	710	80	40	680
450	457,0	630	710	800	100	40	720
500	508,0	630	710	800	100	40	720
600	610,0	800	900	1000	100	40	800
700	711,0	900	1000	–	100	40	850

The required Hx value should be determined on the basis of the district heating network profile and specified in the purchase order.
Other drain diameters on request.
Stainless steel body valves.
On request, vents with a pulled neck on steel and HDPE jacket.

Bottom pre-insulated vents / Top pre-insulated drains



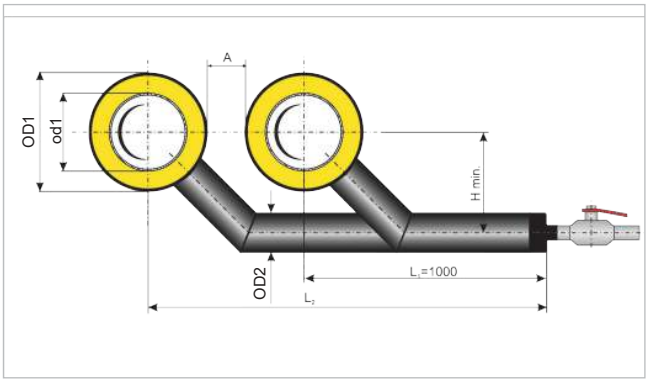

Steel pipe		HDPE casing pipe			HDPE casing pipe			
DN	Outer pipe diameter od [mm]	STANDARD insulation OD [mm]	PLUS insulation OD [mm]	2×PLUS insulation OD [mm]	DN	STANDARD insulation OD [mm]	PLUS insulation OD [mm]	2×PLUS insulation OD [mm]
32	42,4	110	125	140	25	90	110	125
40	48,3	110	125	140	25	90	110	125
50	60,3	125	140	160	25	90	110	125
65	76,1	140	160	200 (180)	32	110	125	140
80	88,9	160	200	225	32	110	125	140
100	114,3	200	225	250	32	110	125	140
125	139,7	225	250	315 (280)	40	110	125	140
150	168,3	250	315	400	40	110	125	140
200	219,1	315	400	450	50	125	140	160
250	273,0	400	450	500	50	125	140	160
300	323,9	450	500	560 (520)	50	125	140	160
350	355,6	500	560	630	65	140	160	200
400	406,4	560	630	710	65	140	160	200
450	457,0	630	710	800	100	200	225	250
500	508,0	630	710	900	100	200	225	250
600	610,0	800	900	1000	100	200	225	250
700	711,0	900	1000	–	100	200	225	250

Notes:
Stainless steel body valves.
Ball valves on the DN25÷DN100 drain pipeline.
Hmin=0,5×(OD1+Dz)+70 [mm].
L2=1000+OD1+A [mm].
A – to be determined from the district heating network design.
Recommended A for the main line diameters:
DN32÷DN150 A≥140 mm,
DN200÷DN700 A≥200 mm.
Other diameters on request.
Main pipeline with a length of 1.5 m.
On request, drains with a pulled neck on steel and HDPE jacket.
For longer drains, a T-pipe with a pre-insulated pipe and a service valve should be used.

Pre-insulated DN25÷300 shut-off valves



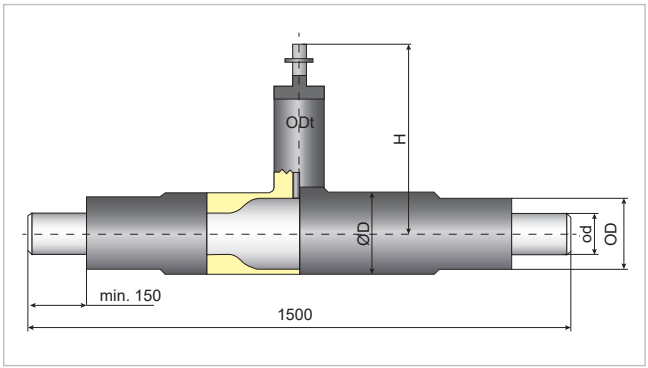

Steel pipe		HDPE casing pipe				Valve stem insulation	Height	Weight
DN	Outer pipe diameter	STANDARD insulation		PLUS insulation	2×PLUS insulation			
	od	Od	ØD	Od/ØD		ODt	~H	~M
[mm]	[mm]	[mm]	[mm]	[mm]	[mm]	[mm]	[mm]	[kg]
25	33,7	90	110	110	125	110	480	8
32	42,4	110	125	125	140	110	485	9
40	48,3	110	125	125	140	110	493	15
50	60,3	125	140	140	160	110	500	17
65	76,1	140	160	160	200	110	505	22
80	88,9	160	200	200	225	110	515	29
100	114,3	200	225	225	250	125	525	42
125	139,7	225	250	250	315	140	545	51
150	168,3	250	315	315	400	140	565	72
200	219,1	315	400	400	450	160	585	108
250	273,0	400	450	450	500	200	613	185
300	323,9	450	500	500	560	200	664	356

Notes:
For operation of valves with a diameter of DN25÷DN80, use a "T" handle wrench, for those with a diameter of N100÷DN300, use a portable planetary gear. Valves with a diameter of DN25÷DN80 may be placed in polyethylene casings in cast iron boxes, those with a diameter of DN100÷DN300 – in wells or chambers to allow the installation of a portable planetary gear.
Valves with a diameter of DN>300 we recommend to be placed in chambers for the convenience of their operation.
On a standard basis, reduced-flow valves.
On request, full-flow valves, valves with a pulled neck on HDPE jacket.
A protective cap is available as an option.

DN32 ÷ 300 pre-insulated shut-off vent valves



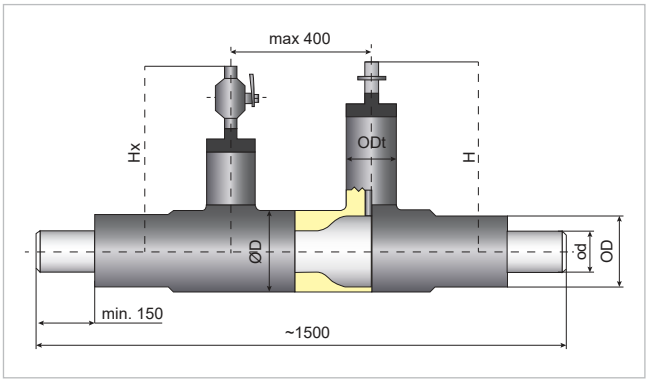

Steel pipe		HDPE casing pipe				Valve stem insulation	Vent nominal diameter	Height		Weight
DN	Outer pipe diameter	STANDARD insulation		PLUS insulation	2×PLUS insulation					
	od [mm]	OD [mm]	ØD [mm]	OD/ØD [mm]	OD/ØD [mm]	ODt [mm]	DN	~H_x [mm]	~H [mm]	~W [kg]
25	33,7	90	110	110	125	110	25/25	450	480	11
32	42,4	110	125	125	140	110	25/32	450	480	13
40	48,3	110	125	125	140	110	25/32	450	485	18
50	60,3	125	140	140	160	110	25/50	460	493	20
65	76,1	140	160	160	200	110	25/50	470	500	25
80	88,9	160	200	200	225	110	25/50	480	505	32
100	114,3	200	225	225	250	125	25/50	500	515	45
125	139,7	225	250	250	315	140	25/50	510	525	54
150	168,3	250	315	315	400	140	25/50	520	545	75
200	219,1	315	400	400	450	160	25/65	550	565	111
250	273,0	400	450	450	500	200	25/65	600	585	188
300	323,9	450	500	500	560	200	25/65	620	613	359

Notes:
The required Hx value should be determined based on the district heating network profile.
Other drain diameters on request.
On request, full-flow shut-off valves.
On a standard basis, reduced-flow shut-off valves.
Service valves with stainless steel body.
On request, valves with a pulled neck on HDPE jacket.

Pre-insulated shut-off drain valves / Pre-insulated shut-off drain/vent valves



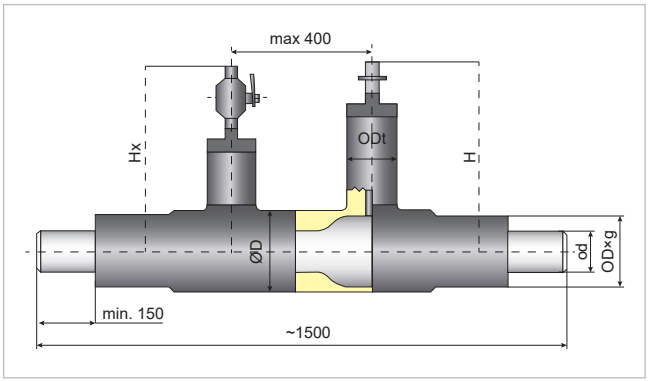

Steel pipe		HDPE casing pipe				Valve stem insulation	Vent nominal diameter	Vent nominal diameter	Height		Weight
DN	Outer pipe diameter	STANDARD insulation		PLUS insulation	2×PLUS insulation						
	od [mm]	OD [mm]	ØD [mm]	OD/ ØD [mm]	OD/ ØD [mm]	ODt [mm]	DN	DN	~H_X [mm]	~H [mm]	~W [kg]
25	33,7	90	110	125	125	110	25	25	450	480	14
32	42,4	110	125	125	140	110	25	25	450	480	15
40	48,3	110	125	125	140	110	25	25	450	485	21
50	60,3	125	140	140	160	110	32	25	460	493	25
65	76,1	140	160	160	200	110	32	25	470	500	30
80	88,9	160	200	200	225	110	32	25	480	505	37
100	114,3	200	225	225	250	125	32	25	500	515	50
125	139,7	225	250	250	315	140	50	25	510	525	59
150	168,3	250	315	315	400	140	50	25	520	545	80
200	219,1	315	400	400	450	140	50	25	550	565	116
250	273,0	400	450	450	500	200	65	25	600	585	194
300	323,9	450	500	500	560	200	65	25	620	613	365

Notes:
The required Hx value should be determined based on the district heating network profile.
On a standard basis, reduced-flow shut-off valves.
Service valves with stainless steel body.
On request, other drain diameters, full-flow shut-off valves, valves with a pulled neck on HDPE jacket.

Pre-insulated reduction



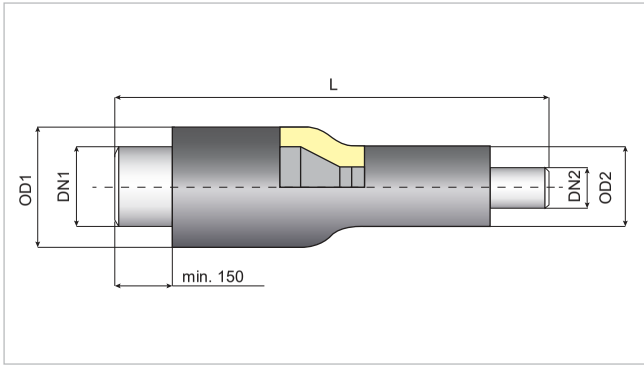

Pre-insulated reductions in the STANDARD insulation

	DN2	20	25	32	40	50	65	80	100	125	150	200	250	300	350	400	500	600
DN1	OD1/OD2	90	90	110	110	125	140	160	200	225	250	315	400	450	500	560	630	800
32	110	✓	✓															
40	110	✓	✓															
50	125	✓	✓	✓	✓													
65	140			✓	✓	✓												
80	160				✓	✓	✓											
100	200					✓	✓	✓										
125	225					✓	✓	✓	✓									
150	250						✓	✓	✓	✓								
200	315							✓	✓	✓	✓							
250	400									✓	✓	✓						
300	450										✓	✓	✓					
350	500											✓	✓	✓				
400	560											✓	✓	✓	✓			
500	630											✓	✓	✓	✓	✓		
600	710												✓	✓	✓	✓	✓	
600	800												✓	✓	✓	✓	✓	
700	900													✓	✓	✓	✓	✓

An alternative solution for a pre-insulated orifice is a steel orifice in a reduction joint.
Available reduction joints in accordance with the table, page 39. DN 800 ÷ 1000 pre-insulated orifices on special request.
Diameter of the SPIRO casing jacket as per the table, page 6.
Length L = 1000 mm or L = 1500 mm.
Standard length L=1000 mm up to DN1 200

Pre-insulated reduction in the PLUS insulation

	DN2	20	25	32	40	50	65	80	100	125	150	200	250	300	350	400	500
DN1	OD1/OD2	110	110	125	125	140	160	200	225	250	315	400	450	500	560	630	710
32	125	✓	✓	–	–	–	–	–	–	–	–	–	–	–	–	–	–
40	125	✓	✓	–	–	–	–	–	–	–	–	–	–	–	–	–	–
50	140	✓	✓	✓	✓	–	–	–	–	–	–	–	–	–	–	–	–
65	160		–	✓	✓	✓	–	–	–	–	–	–	–	–	–	–	–
80	200		–	–	✓	✓	✓	–	–	–	–	–	–	–	–	–	–
100	225		–	–	–	✓	✓	✓	–	–	–	–	–	–	–	–	–
125	250		–	–	–	✓	✓	✓	✓	–	–	–	–	–	–	–	–
150	315		–	–	–	–	✓	✓	✓	✓	–	–	–	–	–	–	–
200	400		–	–	–	–	–	✓	✓	✓	✓	–	–	–	–	–	–
250	450		–	–	–	–	–	–	–	✓	✓	✓	–	–	–	–	–
300	500		–	–	–	–	–	–	–	–	✓	✓	✓	–	–	–	–
350	560		–	–	–	–	–	–	–	–	–	✓	✓	✓	–	–	–
400	630		–	–	–	–	–	–	–	–	–	✓	✓	✓	✓	–	–
500	710		–	–	–	–	–	–	–	–	–	✓	✓	✓	✓	✓	–
600	800		–	–	–	–	–	–	–	–	–	–	✓	✓	✓	✓	✓

Pre-insulated reduction in the 2×PLUS insulation

	DN2	20	25	32	40	50	65	80	100	125	150	200	250	300	350	400	500
DN1	OD1/OD2	125	125	140	140	160	200	225	250	315	400	450	500	560	630	710	800
32	140	✓	✓	–	–	–	–	–	–	–	–	–	–	–	–	–	–
40	140	✓	✓	–	–	–	–	–	–	–	–	–	–	–	–	–	–
50	160	✓	✓	✓	✓	–	–	–	–	–	–	–	–	–	–	–	–
65	200		–	✓	✓	✓	–	–	–	–	–	–	–	–	–	–	–
80	225		–	–	✓	✓	✓	–	–	–	–	–	–	–	–	–	–
100	250		–	–	–	✓	✓	✓	–	–	–	–	–	–	–	–	–
125	315		–	–	–	✓	✓	✓	✓	–	–	–	–	–	–	–	–
150	400		–	–	–	–	✓	✓	✓	✓	–	–	–	–	–	–	–
200	450		–	–	–	–	–	✓	✓	✓	✓	–	–	–	–	–	–
250	500		–	–	–	–	–	–	–	✓	✓	✓	–	–	–	–	–
300	560		–	–	–	–	–	–	–	–	✓	✓	✓	–	–	–	–
350	630		–	–	–	–	–	–	–	–	–	✓	✓	✓	–	–	–
400	710		–	–	–	–	–	–	–	–	–	✓	✓	✓	✓	–	–
500	800		–	–	–	–	–	–	–	–	–	✓	✓	✓	✓	✓	–
600	1000		–	–	–	–	–	–	–	–	–	–	✓	✓	✓	✓	✓

Diameter of the SPIRO casing jacket as per the table, page 6.
Length L = 1000 mm or L = 1500 mm.`
Standard length L=1000 mm up to DN1 200

Pre-insulated fixed points

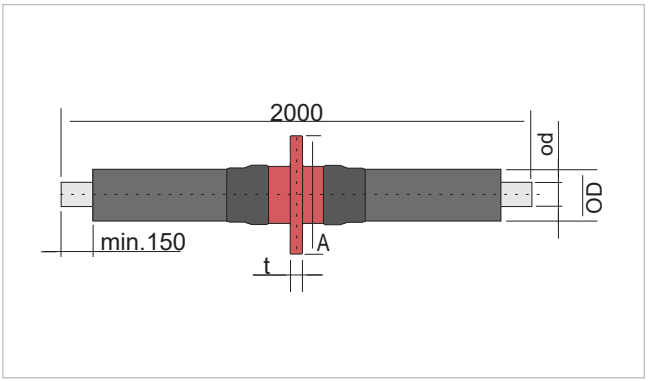

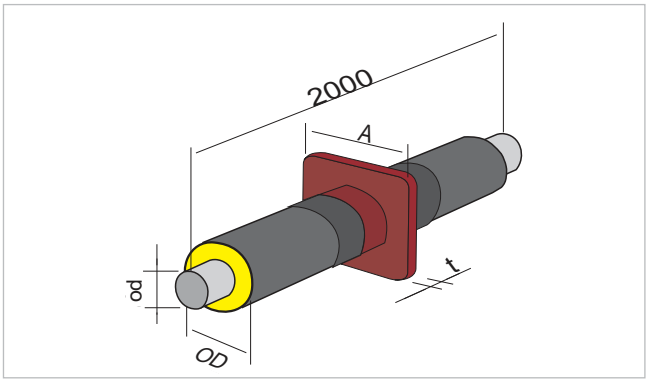

DN	Steel pipe	HDPE casing pipe			Retaining plate dimensions			Ring thickness	Max. force
	STANDARD seamless pipes	STANDARD insulation	PLUS insulation	2×PLUS insulation	STANDARD insulation	PLUS insulation	2×PLUS insulation		
	od [mm]	OD [mm]	OD [mm]	OD [mm]	A [mm]	A [mm]	A [mm]	t [mm]	T [mm]
32	42,4	110	125	140	210	225	450	16	80
40	48,3	110	125	140	210	225	450	16	93
50	60,3	125	140	160	225	240	260	16	130
65	76,1	140	160	200	240	260	300	16	230
80	88,9	160	200	225	260	300	325	20	280
100	114,3	200	225	250	300	325	350	20	400
125	139,7	225	250	315	350	415	480	20	710
150	168,3	250	315	400	350	415	500	25	710
200	219,1	315	400	450	415	500	550	25	990
250	273,0	400	450	500	500	550	600	50	1360
300	323,9	450	500	560	600	650	710	50	1650
350	355,6	500	560	630	650	700	780	55	1700
400	406,4	560	630	710	700	800	850	60	2000
500	508,0	630	710	900	800	1000	1070	80	2500
600	610,0	800	900	1000	1000	1250	1400	80	3100

Notes:
The specified force is the admissible load of the retaining plate.
The force for the concrete block should be calculated separately.
The permissible block displacement is 2% in relation to its height.
Diameter of the SPIRO casing jacket as per the table, page 6.

Pre-insulated compensators



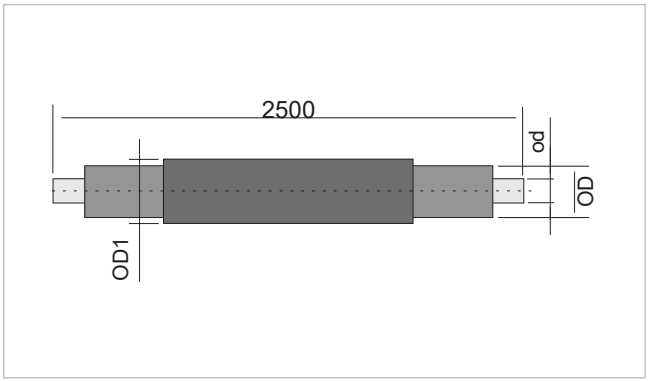

Steel pipe		HDPE casing pipe				Compensation capacity
DN	Pipe outer diameter	STANDARD insulation		PLUS insulation	2×PLUS insulation	
	od [mm]	OD [mm]	OD1 [mm]	OD/OD1 [mm]	OD/OD1 [mm]	ΔL [mm]
50	60,3	125	140	140	160	-100
65	76,1	140	160	160	200	-100
80	88,9	160	200	200	225	-100, -150
100	114,3	200	225	225	250	-125, -155
125	139,7	225	250	250	315	-125, -160
150	168,3	250	315	315	400	-125, -165
200	219,1	315	400	400	450	-125, -170
250	273,0	400	450	450	500	-125, -170
300	323,9	450	500	500	560	-125, -190
350	355,6	500	560	560	630	-125, -190
400	406,4	560	630	630	710	-125, -200
500	508,0	630	710	710	900	-125, -200
600	610,0	800	800	900	1100	-125, -200

Notes:
Compensation capacity should be specified in the purchase order.
Compensators are delivered with a factory setting.

Type E disposable compensators



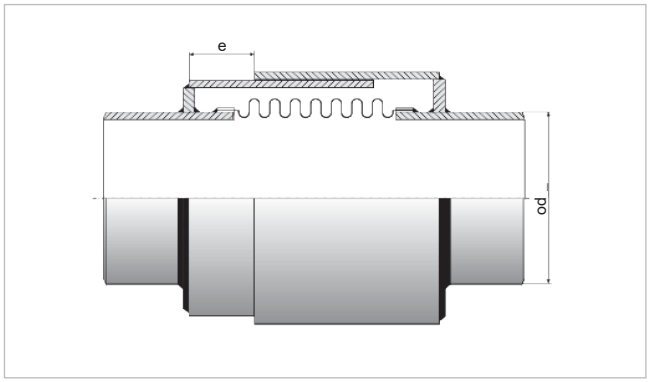

Bellows expansion joint, not pre-insulated

Steel pipe		Max. working movement	Weight
DN	Pipe outer diameter od [mm]	e [mm]	~W [kg]
50	60,3	-50	4
65	76,1	-70	5
80	88,9	-70	7
100	114,3	-80	11
125	139,7	-80	14
150	168,3	-100	22
200	219,1	-120	36
250	273,0	-120	46
300	323,9	-140	62
350	355,6	-140	70
400	406,4	-140	88
500	508,0	-150	121
600	610,0	-150	174

Notes:
The “e” value in the table only shows the scope of applicability of the compensator.
The value of the required working movement should be specified in the design (purchase order) and performed at the construction site.
A long joint, foam and alarm system conductors should be additionally ordered for the compensator.

Adapters



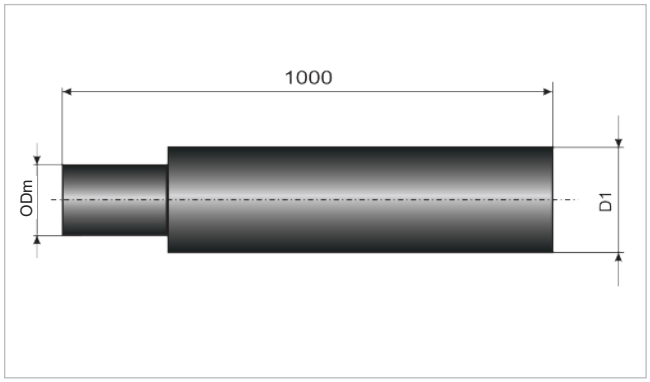

Material – high-density polyethylene (HDPE)

Casing pipe	Adapter	
OD [mm]	**ODm** [mm]	**D1*** [mm]
90	101	125
110	121	140
125	137	160
140	157	200
160	174	225
200	215	250
225	241	315
250	267	400
315	334	450
400	425	500
450	475	630
500	525	710
560	590	800
630	660	900

* Adapters with a D1 other than specified in the table are possible.
The following should be integrated with an adapter:

- heat-shrink tape in accordance with the table in the catalog for ODm
- reinforcing strip – 1 piece

HDPE collars



Material – high-density polyethylene (HDPE)

Galvanized steel joint



Material – galvanized steel

Pre-insulated pipe	HDPE collar		SPIRO joints	
DN	ODm max [mm]	Tm min [mm]	ODm [mm]	Tm [mm]
90	101,1	3,0	100	0,5
110	121,1	3,0	125	0,5
125	137,3	3,0	125	0,5
140	157,0	3,0	160	0,5
160	174,0	3,0	160	0,5
200	215,5	3,0	200	0,5
225	241,0	3,4	224	0,5
250	267,0	3,4	250	0,5
315	334,0	4,0	315	0,5
400	425,0	5,0	400	0,6
450	475,0	5,0	450	0,6
500	525,0	7,8	500	0,7
560	590,0	8,8	560	0,7
630	660,0	9,8	630	0,7
710	740,0	11,1	710	0,7
800	840,0	12,5	800	0,7
900	950,0	12,9	900	0,9

Notes:
The minimum length of the joint is 500 mm.
The following should be integrated with a HDPE joint:

- polyurethane foam components
- vent plugs – 2 pcs
- welded plugs – 2 pcs
- reinforcing strip – 2 pcs
- heat-shrink tape in accordance with the table in the catalog.

The following should be integrated with a SPIRO joint:

- flexible or rigid polyurethane foam components
- sheet metal screws and washers – 5 pcs of each
- 6 mm sealing rope

Heat-shrink radially cross-linked joint for pre-insulated district heating networks



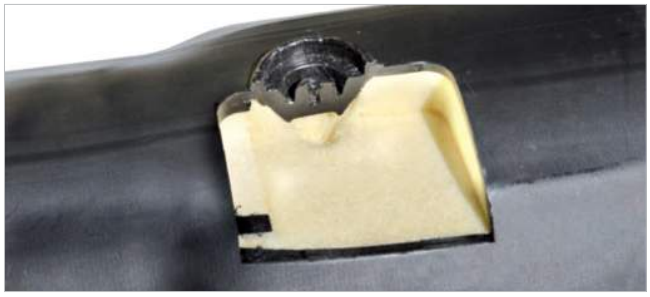

Heat-shrink joints are used for reconstructing the outer jacket at the connections of pre-insulated district heating pipe sections. A high joint shrinking force on the casing pipe and a shape memory allow radially cross-linked polyethylene to produce a strong, flexible and tight joint, resistant to temperatures from -55 to +125 °C. Heat-shrink radially cross-linked joints perfectly reflect the pre-insulated pipe casing jacket, which reduces friction resistance in the ground and increases the service life of the joint, and are characterized by high resistance to stress corrosion. Owing to the high shrinking force, mechanical strength to stresses during thermal expansions of the network caused by variable temperature of the heating medium and resistance to aging, the joints ensure long service life of the district heating network and safety of pre-insulated pipe joints.

During the manufacturing process, only the areas where the filling openings are located are protected against cross-linking. Except for those areas, the entire joint is cross-linked. Non-cross-linked zones retain the original HDPE properties, which makes it technologically possible to spot-weld sealing plugs. The unique combination of the properties of a non-cross-linked material (possibility of plug spot-welding) and a cross-linked material (high shrinking force, excellent shape reflection, increased mechanical durability), and the specially composed sealant recipe (heat-melt adhesive and/or mastic) make this solution one of the most innovative, installation-friendly and reliable pre-insulated pipe joints on the market.

The solution is registered and protected by the patent no. PAT. 205918

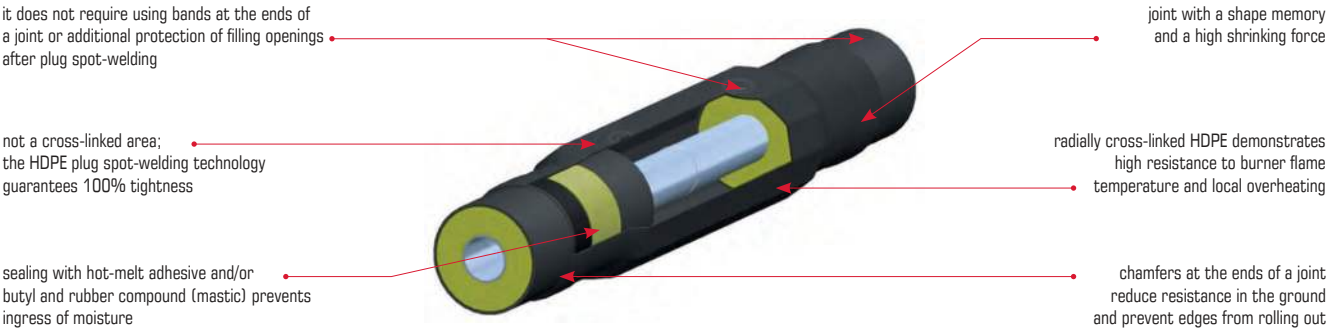

Specification:

- soil stress test certificate (the so-called sandbox test or box test) for 1,500 cycles in accordance with PN-EN 489:2009, sealing of joints with hotmelt adhesive and butyl and rubber compound,
- equipped with 2 vent plugs and 2 spot-welding plugs, cleaning tissues,
- factory-made filling openings are adjusted to vent plugs,
- heat-shrink joint is made of high-density black polyethylene, radially cross-linked,
- high mechanical strength of the cross-linked material ensures resistance to breakage and abrasion,
- appropriate sealing in the joint protects the joint area in difficult conditions,
- the small number of components making up the joint limits the installation time to a minimum, and thus improves the joint installation efficiency,
- reduction of joint costs (heat-shrink bands are not required),
- joints are resistant to corrosive chemical agents and UV radiation,
- uniform sealant layer in the form of hot-melt adhesive and/or butyl compound is not susceptible to adhesion of foreign bodies and does not tear off when the joint moves along the casing pipe,
- each joint is packaged individually in a white foil tube.

Composition of a heat-shrink radially cross-linked joint symbol

The standard for joints is MxxDPW/DPW-L
Other joints types on request.

M 90 D P W - L

joint length
– a joint for pipes with a steel pipe end of 150 mm
L – a joint for pipes with a steel pipe end of 220 mm

type of blanking plugs for fill openings of the bell and spigot joint
W – fused plugs

type of sealant between the joint and the pre-insulated pipe casing pipe
– without a sealant
K – heat-melt adhesive
M – butyl rubber strip
M/100 – 100 mm wide butyl rubber strip
P – heat-melt adhesive and butyl rubber strip (double sealant recommended in the case of high ground water level)

heat-shrink collar shape
– straight (one dimension over the entire length)
D – bell-and-spigot (neck in the center of the collar, bell dimension as in the straight collar)

heat-shrink joint size (determined by the outer diameter of the pre-insulated pipe jacket)
90 – for pre-insulated pipe 20 (25)/90
110 – for pre-insulated pipe 32 (40)/110
125 – for pre-insulated pipe 50/125
140 – for pre-insulated pipe 65/140
160 – for pre-insulated pipe 80/160
180 – for pre-insulated pipe 80/180 (PLUS insulation)
200 – for pre-insulated pipe 100/200
225 – for pre-insulated pipe 125/225
250 – for pre-insulated pipe 150/250
280 – for pre-insulated pipe 150/280 (PLUS insulation)
315 – for pre-insulated pipe 200/315
355 – for pre-insulated pipe 200/355 (PLUS insulation)
400 – for pre-insulated pipe 250/400
450 – for pre-insulated pipe 300/450
500 – for pre-insulated pipe 350/500
520 – for pre-insulated pipe 400/520
560 – for pre-insulated pipe 450/560
630 – for pre-insulated pipe 500/630

general symbol of the product group
M – heat-shrink joint for district heating applications

Heat-shrink radially cross-linked joints



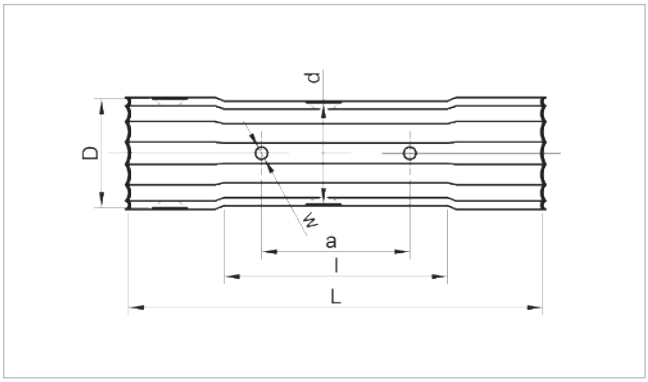

Material – high-density polyethylene (HDPE)

OD	Joint dimensions							Outlet pipe dimensions	Joint name
	Bell	Neck	Catalog length	Delivery length	Length between bells	Fill opening spacing	Fill opening diameter		
[mm]	D [mm]	d [mm]	Cat. L [mm]	Deliv. L (±20) [mm]	l [mm]	a [mm]	w [mm]	OD×S [mm]	
90	107+5	97+5	650	670	350	240	20	77×3,8	M90DPW
110	130+5	120+5	650	670	350	240	20	90×3,9	M110DPW
125	147+5	137+5	650	670	350	240	20	110×3,2	M125DPW
140	160+5	150+5	650	670	350	240	20	125×3,2	M140DPW
160	182+10	172+10	650	670	350	240	20	140×3,5	M160DPW
180	200+10	190+10	650	670	350	240	20	140×3,5	M180DPW
200	220+10	210+10	650	670	350	240	20	160×3,8	M200DPW
225	249+10	239+10	650	670	350	240	20	200×3,7	M225DPW
250	275+10	265+10	650	670	350	240	20	225×4,1	M250DPW
280	305+10	295+10	650	670	350	240	20	225×4,1	M280DPW
315	340+15	330+15	650	670	350	240	20	250×4,5	M315DPW
355	390+15	380+15	650	670	350	240	20	250×5,5	M355DPW
400	430+15	420+15	650	670	350	240	20	338×5,8	M400DPW
450	490+15	480+15	650	670	350	240	20	338×5,8	M450DPW
500	540+20	530+20	750	770	350	240	20	398×5,8	M500DPW
560	590+20	580+20	750	770	350	240	20	398×5,8	M560DPW
630*	670+20	660+20	750	770	350	240	20	400×8,5	M630DPW
710*	750+40	740+40	750	770	350	240	20	560x9,5	M710DPW

Long joints with the letter "L" (MXDPW-L) are available for connectors with a pipe spigot of 220 mm.





illustrative photo

The following items are delivered together with the joints:
- vent plugs – 2 pcs.
- welded plugs – 2 pcs.
- cleaning tissues – 2 pcs.

Integrally for the cross-linked joint, we recommend to provide:
- polyurethane foam components.
- required elements of the alarm system

We offer joints in standard version (HDPE) and with diffusion barrier.
Radionally cross-linked shrink joints are resistant to UV radiation and can be used to insulate jacket connections with UV barrier.
Color: black, grey and blue – other color jacket compliant with RAL on request.

Heat-shrink elbow joints

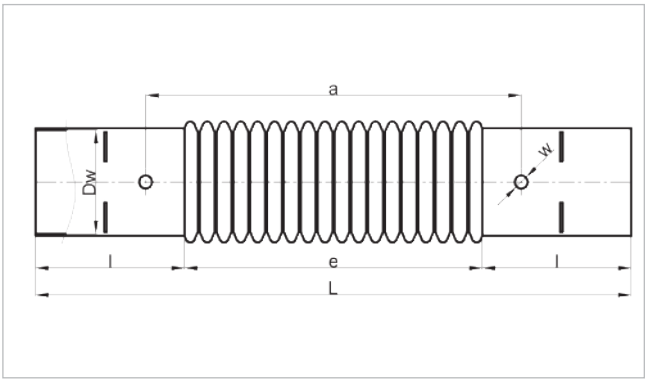



Material – black, radially cross-linked high density polyethylene (HDPE)

Elbow joint type	joint dimensions [mm]					
	Inner diameter	Total length	Straight part length	Fill opening diameter	Fill opening spacing	Outlet pipe dimensions
	ID	L	l	w	a	e
MK90MW	110	840	220	20	535	400
MK110MW	135	895	220	20	590	455
MK125MW	151	925	220	20	610	485
MK140MW	166	930	220	20	610	490
MK160MW	187	930	220	20	610	490
MK200MW	225	1055	220	20	775	615
MK225MW-250MW	275	1190	220	20	890	790

1) approximate value
Elbow with an angle < 70° may be used alternatively

The following items are delivered together with the joint:
- vent plugs – 2 pcs.,
- welded plugs – 2 pcs.,
- cleaning tissues – 2 pcs.





illustrative photo

- steel elbow,
- polyurethane foam components,
- spacer rings – 2 pcs.,
- alarm system wiring,
- components for connecting the alarm system as per 2 sets of joints.

To install the elbow joints properly, only steel elbows with adapted dimensions and bending radii should be used.

Steel elbow tube type				Elbow joint type
Nominal diameter DN	Outer diameter OD [mm]	Wall thickness	Bend radius R	
20	26,9	2,3	125	MK90MW
25	33,7	2,6	125	
32	42,4	2,6	150	MK110MW
40	48,3	2,6	150	
50	60,3	2,9	170	MK125MW
65	76,1	2,9	180	MK140MW
80	88,9	3,2	200	MK160MW
100	114,3	3,6	240	MK200MW
125	139,7	3,6	310	MK225-250MW
150	168,3	4,0	310	

Additional elbow joint accessories

The steel elbow can be included with the joint at the request of the Customer.



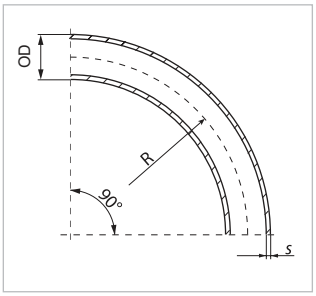

Branch joints / Branch elbow joints

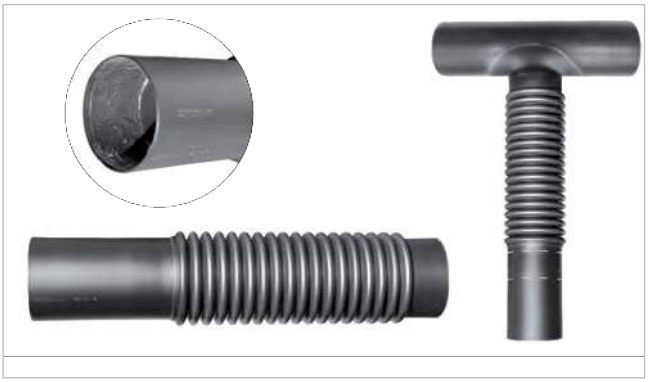

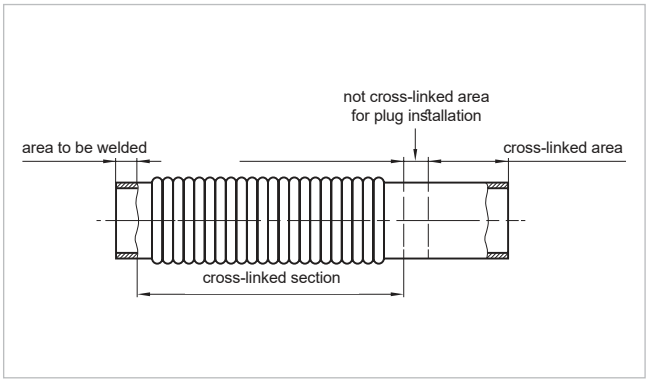

A branch elbow joint is one of the proposed methods for reconstructing the preinsulation on the steel branch constructed on site by making a hot or cold "tie-in connection" in the existing pre-insulated pipeline. The tie-in connection constructed on site is an alternative to the installation of a pre-insulated perpendicular or parallel T-pipe. Additionally, the joint protects the existing pipeline against undesired effects that may arise when the pipeline is cut to install the pre-insulated T-pipe, and in the case of a hot tie-in connection, also against water drainage.

The use of a branch elbow joint allows a safe reconstruction of the preinsulation under construction conditions and reduction of the installation time. Additionally, it provides a possibility to flexibly form the casing of the constructed steel branch.

Like all the joints offered by RAPDOL PIPES sp. z o.o., the elbow joint is made of radially cross-linked HDPE, whereas the joint (or patch) welded to it with a vent, is made of non-cross-linked HDPE.

The non-cross-linked PE joint (patch) is made air-tight by being electrically welded to the PE jacket of the main pipeline or by means of a manual extruder.

Specification

- radially cross-linked branch joint,
- high strength and shrinking force,
- any angle of departure between 0° and 90°,
- for two branch pipe sizes,
- reliable sealant with a fused plug,
- sealant: mastic, heat-melt adhesive, double sealant,
- quick installation without the use of special equipment,
- much cheaper solution than the prefabricated version,
- shorter installation time than in the prefabricated version,
- smaller installation dimensions than in the prefabricated version,
- possibility of use during a (cold and hot) tie-in connection on site.

The following items are delivered together with the joint:

- vent plugs – 2 pcs.
- welded plugs – 2 pcs.
- cleaning tissues – 2 pcs.

The following should be integrated into a cross-linked joint:

- polyurethane foam components.

Pre-insulated pipe dimensions		Joint
Casing pipe	Carrier pipe DN	
90	20, 25	MK/I-90MW
110	32, 40	MK/I-110MW
125	50	MK/I-125MW
140	65	MK/I-140MW
160	80	MK/I-160MW

HDPE main pipe DN	Branch pipe DN				
	90	110	125	140	160
90					
110					
125					
140	✓				
160	✓	✓			
180	✓	✓	✓		
200	✓	✓	✓	✓	
225	✓	✓	✓	✓	✓
250	✓	✓	✓	✓	✓
315	✓	✓	✓	✓	✓
400	✓	✓	✓	✓	✓





illustrative photo

Heat-shrink reducer joints



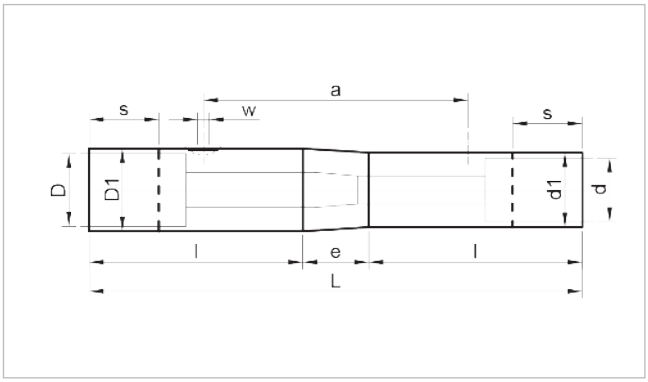

Material – black, radially cross-linked high density polyethylene (HDPE)

Scope of application of the casing pipe	Pre-insulateed pipe		Joint dimensions								Outlet pipe dimensions
	inlet	outlet	Large diameter	Small diameter	Length	Straight section	Cone	Fill opening spacing	Fill opening diameter	Shrink area	
OD [mm]	D [mm]	d [mm]	D1 ±5 [mm]	d1 ±5 [mm]	L + 5 [mm]	l-2 [mm]	e [mm]	a ±5 [mm]	w [mm]	s [mm]	OD×S [mm]
110/90	110	90	125	100	650	270	115	305	20	120	77×3,9
125/110/90	125	110/90	140	125	700	295	115	330	20	120	77×4,3
140/125/110	140	125/110	160	140	700	295	115	330	20	120	90×5,0
160/140/125	160	140/125	180	160	700	295	115	330	20	120	110×5,0
200/160/140	200	160/140	220	180	700	295	115	330	20	120	125×5,0
225/200/160	225	200/160	245	220	760	325	115	380	20	120	140×7,0
250/225/200	250	225/200	265	245	760	325	115	380	20	120	160×7,0
315/250/225	315	250/225	330	265	760	325	115	380	20	120	200×7,5

The following items are delivered together with the joint:
- vent plugs – 2 pcs.
- welded plugs – 2 pcs.
- cleaning tissues – 2 pcs.

The following should be integrated into a cross-linked joint:
- polyurethane foam components.
- steel reducer.





illustrative photo

Branch joints



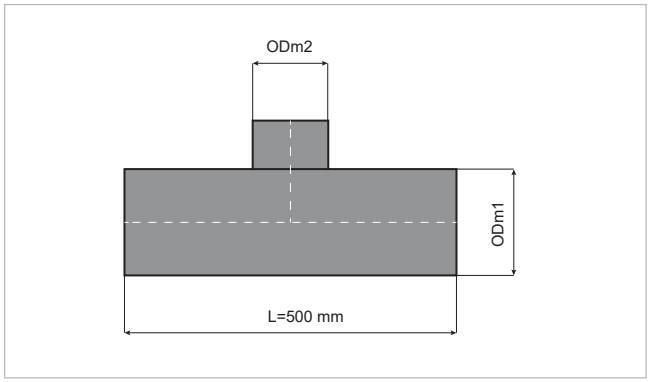

ODm1, ODm2 – diameters are selected in accordance with the table for heat-shrink joints

The following should be integrated into the joint:

- polyurethane foam components
- vent plugs – 2 pcs
- fused plugs – 2 pcs.,
- reinforcing strip for ODm1 – 2 pcs.,
- reinforcing strip for ODm2 – 1 piece,
- heat-shrink tape for ODm1 × 2 pcs – in accordance with the table in the catalog,
- heat-shrink tape for ODm2 × 1 piece – in accordance with the table in the catalog.

HDPE termination joints



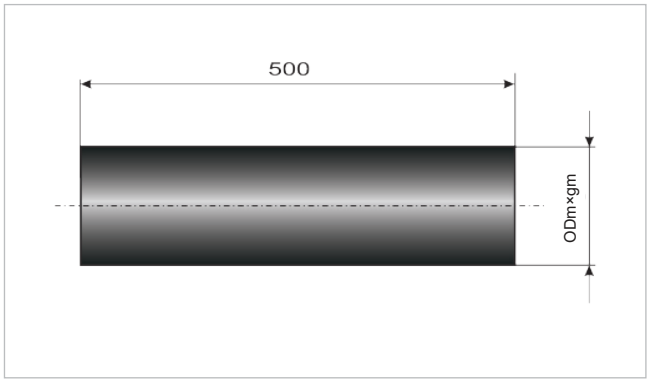

Material – high-density polyethylene (HDPE)

Pre-insulated pipe	Polyethylene joints	
OD	OD_m max	T_m min
[mm]	[mm]	
90	101,1	3,0
110	121,1	3,0
125	137,3	3,0
140	157,0	3,0
160	174,0	3,0
200	215,5	3,0
225	241,0	3,4
250	267,0	3,4
315	334,0	4,0
400	425,0	5,0
450	475,0	5,0
500	525,0	7,8
560	590,0	8,8
630	660,0	9,8
710	740,0	11,1
800	840,0	12,5
900	950,0	12,9

The minimum length of the joint is 500 mm.
The following should be integrated with a HDPE joint:

- polyurethane foam components,
- vent plugs – 1 pcs,
- fused plugs – 1 piece,
- reinforcing strip – 1 piece,
- heat-shrink tape in accordance with the table in the catalog.

Protective cap

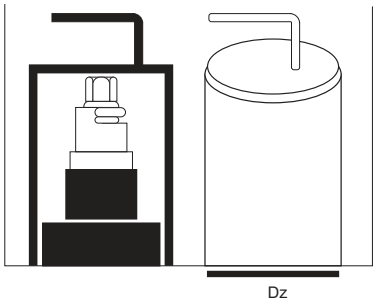

The diameter of the protective cap is selected at based on stem, shut-off, drainage or venting valve diameter
The purpose for use of the cap is protection from water getting through under the endcap of the valve.

Electrically welded joints



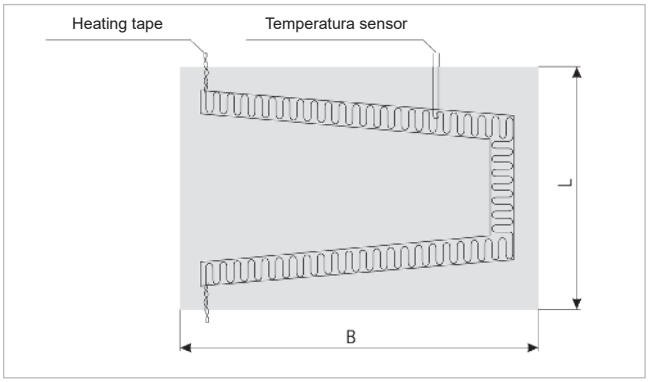

Pre-insulated pipe OD [mm]	Dimensions		
	"L" length [mm]	"B" width [mm]	Thickness [mm]
90	700 lub 850	450	4
110	700 lub 850	515	4
125	700 lub 850	560	4
140	700 lub 850	610	4
160	700 lub 850	675	4
200	700 lub 850	805	4
225	700 lub 850	885	4
250	700 lub 850	950	4
315	700 lub 850	1160	4
400	700 lub 850	1440	4
450	700 lub 850	1600	4
500	700 lub 850	1830	6
560	700 lub 850	2020	6
630	700 lub 850	2250	6
710	700 lub 850	2580	8
800	700 lub 850	2870	8
900	700 lub 850	3190	8
1000	700 lub 850	3510	8
1100	700 lub 850	3830	8
1200	700 lub 850	4150	8

The following should be integrated into the joint:
- vent plugs – 2 pcs,
- welded plugs – 2 pcs.





The following should be integrated into the electrically welded joint:
- polyurethane foam components.

Open joints



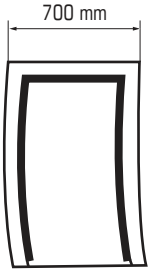

S – Standard flat muff

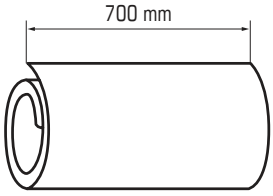

R – pre-coiled joint

Standard electro-couplers (700 mm wide) are designed for the construction of pre-insulated pipes networks. They are built on the basis of a PE100 plate in which a heating element compatible with KmT 2k8P and KmT 2k8P-I welders is implemented. Electromagnetic joints can be delivered to the construction site in a pre-rolled form (for diameters up to Ø450 mm) or in sheets. Each joint has a unique bar code, based on which the welding machine automatically selects the welding parameters.

Joint type KAMITECH	Diameter of Casing pipe PE [MM]	Width [mm]	Thickness [mm]	Realization	Weight [kg]
PE-L 110	110	700	4	S / R	1,5
PE-L 125	125	700	4	S / R	1,6
PE-L 140	140	700	4	S / R	1,8
PE-L 160	160	700	4	S / R	2,0
PE-L 180	180	700	4	S / R	2,1
PE-L 200	200	700	4	S / R	2,3
PE-L 225	225	700	4	S / R	2,6
PE-L 250	250	700	4	S / R	2,8
PE-L 280	280	700	4	S / R	3,1
PE-L 315	315	700	4	S / R	3,4
PE-L 355	355	700	4	S / R	3,8
PE-L 400	400	700	4	S / R	4,2
PE-L 450	450	700	4	S	4,6
PE-L 500	500	700	5	S	6,5
PE-L 520	520	700	5	S	6,7
PE-L 560	560	700	5	S	7,1
PE-L 630	630	700	6	S	9,5
PE-L 710	710	700	8	S	14,4
PE-L 800	800	700	8	S	16,4
PE-L 900	900	700	8	S	17,9
PE-L 1000	1000	700	8	S	19,7
PE-L 1100	1100	700	8	S	21,5
PE-L 1200	1200	700	8	S	23,3

Set contains:
- a joint of selected diameter,
- T-shaped mounting bracket,
- set of foam plugs – sealing.

Heat-shrink tapes with a reinforcing strip



Material:

- heat-shrink tape – cross-linked polyolefin
- reinforcing strip – glass fibre-reinforced polyolefin

Casing pipe	Heat-shrink tape length per single band	Heat-shrink tape width	Reinforcing strip length
OD [mm]	**a** [mm]	**b** [mm]	**c** [mm]
90	0,40	150,0	150,0
110	0,50	150,0	150,0
125	0,55	150,0	150,0
140	0,60	150,0	150,0
160	0,65	150,0	150,0
200	0,80	150,0	150,0
225	0,95	150,0	150,0
250	1,00	150,0	150,0
315	1,25	225,0	230,0
400	1,55	225,0	230,0
450	1,70	225,0	230,0
500	1,90	225,0	230,0
560	2,10	225,0	230,0
630	2,40	300,0	300,0
710	2,70	300,0	300,0
800	3,00	300,0	300,0
900	3,40	300,0	300,0
1000	3,60	300,0	300,0
1100	4,00	300,0	300,0
1200	4,20	300,0	300,0

END-CAP REC



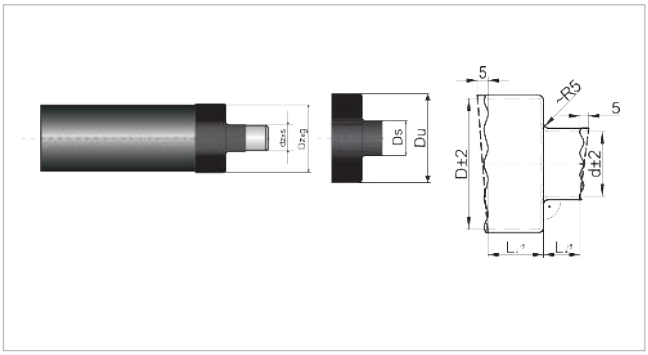

Material – cross-linked polyolefin

Casing pipe	Terminal gasket				Fitting dimensions		Product name
	Shrinking on a casing pipe		Shrinking on a steel pipe				
OD [mm]	Du [mm]	Du_{min} [mm]	Ds [mm]	Ds_{min} [mm]	L1 [mm]	L2 [mm]	
90	105	75	45	25	60	40	REC 90
110	125	75	65	25	60	40	REC 110
125	140	90	75	32	60	40	REC 125
140	156	110	95	32	60	40	REC 140
160	178	125	105	42	80	50	REC 160
200	220	140	128	77	80	50	REC 200
225	245	140	155	77	80	50	REC 225
250	270	160	185	90	80	50	REC 250
315	335	160	236	90	80	50	REC 315
400	420	315	290	200	80	50	REC 400
450	475	315	340	200	80	50	REC 450
500	520	450	375	250	100	70	REC 500
560	580	500	475	250	100	70	REC 560
630	650	560	530	250	100	70	REC 630

END-CAP REC Z



Pre-insulated pipe dimensions [mm]		END-CAP
Casing pipe [mm]	Carrier pipe DN [mm]	
90	20, 25	REC90 Z
110	32, 40	REC110 Z
125	50	REC125 Z
140	65	REC140 Z
160	80	REC160 Z
200	100	REC200 Z

At the time of delivery the diameter of the section of the REC Z gasket which is shrunk down on the steel pipe is increased so that it can be placed through the valve spindle. The fittings can be made to dimensions other than those indicated in the table.

DN400÷1000 heat-shrink terminal gaskets

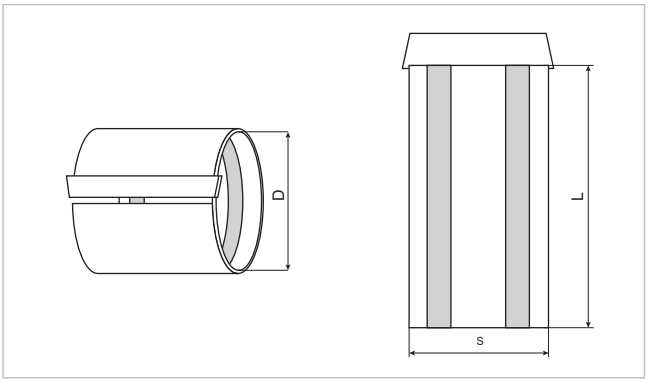



Pre-insulated pipe	Post-shrinking diameter	Width of the terminal gasket	Length
OD [mm]	**D** [mm]	**S** [mm]	**L** [mm]
560	280	305	1830
630	295	305	2100
710	338	345	2300
800	380	345	2610
900	430	390	2950
1000	486	390	3290
1100	523	435	3600
1200	580	435	3900

Rubber sealing rings

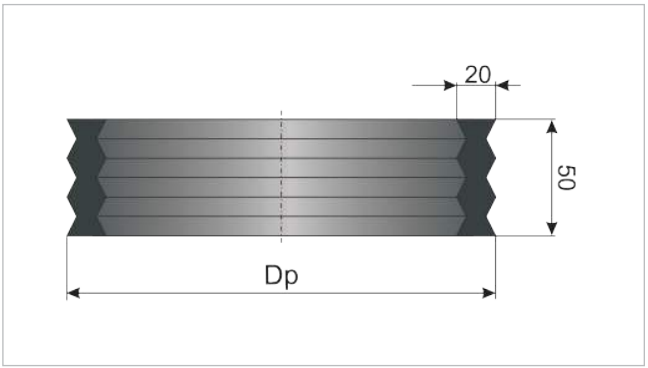



Material – rubber

Pre-insulated pipe	Diameter
OD [mm]	**Dp** [mm]
90	130
110	150
125	165
140	180
160	200
200	240
225	265
250	290
315	355
400	440
450	490
500	540
560	600
630	670
710	750
800	840
900	940
1000	1040
1100	1140
1200	1240

Warning tapes

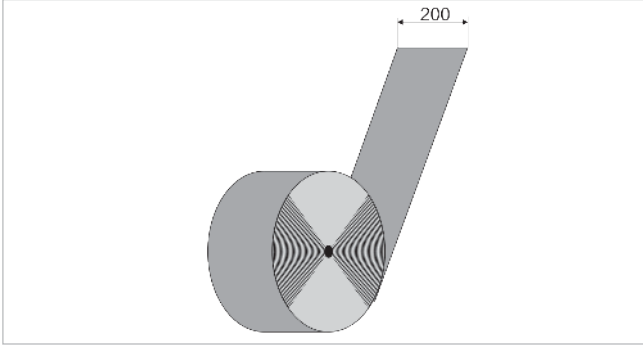

Purple color
Roll length – 50 running meters
Roll width – 200 centimeters

Blanking plugs

Vent plug
Plugs with a nominal diameter of 20 mm are made of HDPE. They evacuate excess air during the PUR foam binding reaction and are removed after the foam has hardened.

Welded plug
Plugs with a nominal diameter of 34 mm made of HDPE, with a melt flow-rate comparable to the joint material. They protect the fill openings in the joint. Mounted with the use of a plug holder and welding machine. The plug is marked in accordance with EN 489.



Vent plug — Welded plug (to be fused)

Material – polyethylene. Standard color – black

Heat-shrink radially cross-linked joints installation tools



Straight plug welding machine
The straight plug welding machine is intended for fusing blanking plugs for the fill openings in joints. The device is provided with the option of temperature control and heating time signaling.
Power: 600 W.
Head excluded (available on request).



Welding machine head
The head is covered with a Teflon anti-adhesive layer. It is used for heating the plug and opening in the joint as a spare part for the welding machine.
If the Teflon layer becomes damaged or a deposit of burnt polyethylene is formed, the head should be replaced with a new one. The head cannot be contaminated with PUR foam.



Plug holder
The holder allows to heat the plug properly, without the risk of its perforation with the tip screwed into the plug. It facilitates the control of the plasticity degree of the plug material by observing material flashes.
It protects the surface of the plug with the manufacturer's identification mark in accordance with the requirements of EN 489.



Burner with 3 nozzles ∅ 25; 35; 50 mm
Specification:
- Fueled with propane butane,
- Easy to use while maintaining very good performance and operational safety,
- Hand grip with flame control,
- Nozzle replacement option,
- Designed for shrinking heat-shrink radial cross-linked joints.

Technical data:
- Maximum flame temperature: 1850°C,
- Gas consumption: 2000 g/h,
- Thermal capacity: 19.5 kW.

The set includes:
- 3 nozzles: ∅ 25; 35; 50 mm,
- 1.5 m reinforced rubber hose,
- burner.



Tapered cutter
The ∅ 27 or ∅ 24,5 tapered cutter allows to make holes for fused plugs.
It cuts out the appropriate hole. It should be sharpened only with the use of a tool grinder (not manually) to maintain the required blade geometry. Otherwise, a defective cutter can damage the joint while drilling the opening.

Compensating cushions typ B PE

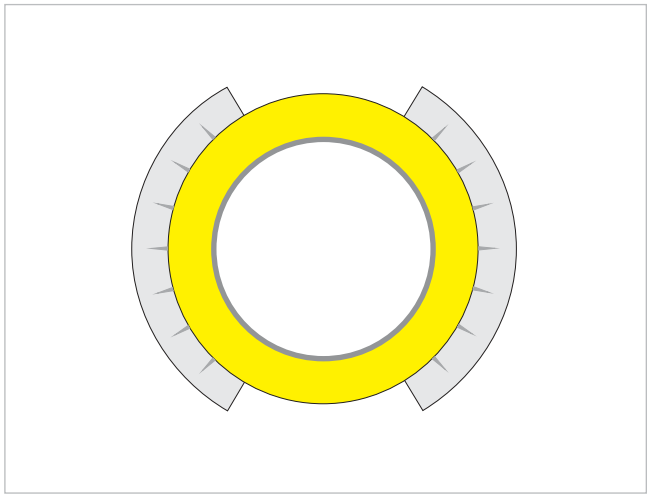

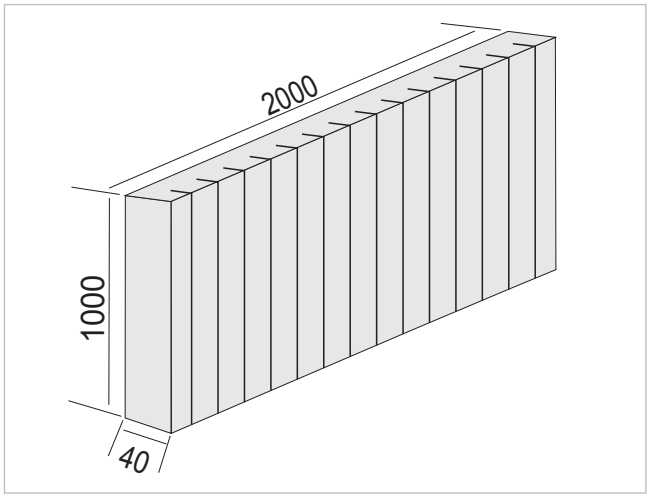

Material: cross-linked foamed polyethylene

Properties of PE expansion pads	
Deformation	**Shear stress**
40%	0,06MPa
50%	0,09MPa
75%	0,275MPa

Thermal conductivity $\lambda = 0{,}05 W/mK$

Polyurethane foam components for filling joints

Steel pipe	Casing pipe OD	PLUS insulation	
DN	[mm]	PUR No.	Foam quantity [g]
20÷25	110	P110	418
32÷40	125	P125	523
50	140	P140	577
65	160	160	750
80	200	P200	1074
100	225	P225	1302
125	250	P250	1448
150	315	P315	2104
200	400	P400	3520
250	450	P450	3921
300	500	P500	2x2610
350	560	P560	2x2825

Note: for diameters above DN250, manual foaming is not recommended due to the foam quality in the joint.

MANUAL FOAMING – non-insulated ends L=220 mm			
Steel pipe	Casing pipe	STANDARD insulation	
DN	OD [mm]	PUR No.	Foam quantity [g]
20÷25	110	P110-L	730
32÷40	125	P125-L	835
50	140	P140-L	1070
65	160	P160-L	1285
80	200	P200-L	2025
100	225	P225-L	2210
125	250	P250-L	2480
150	315	P315-L	3490
200	400	P400-L	4275
250	450	P450-L	4725

Note: for diameters above DN200, manual foaming is not recommended due to the foam quality in the joint.

Polyurethane foam components for filling reduction joints

MANUAL FOAMING				
Joint dimension	STANDARD insulation		PLUS insulation	
	PUR No.	Foam quantity [g]	PUR No.	Foam quantity [g]]
MR110/90	P110	418	–	–
MR125/110/90	P125	523	P125	523
MR140/125/110	P140	577	P140	577
MR160/140/125	P160	750	P160	750
MR200/160/140	P200	1074	P200	1074
MR225/200/160	P225	1302	P225	1302
MR250/225/200	P250	1448	P250	1448
MR315/250/225	P315	2104	P315	2104
MR110/90	P110-L	730	-	
MR125/110/90-L	P125-L	835	P125-L	835
MR140/125/110-L	P140-L	1070	P140-L	1070
MR160/140/125-L	P160-L	1285	P160-L	1285
MR200/160/140-L	P200-L	2025	P200-L	2025
MR225/200/160-L	P225-L	2210	P225-L	2210
MR250/225/200-L	P250-L	2480	P250-L	2480

MANUAL FOAMING – non-insulated ends L=150 mm			
Steel pipe	Casing pipe	STANDARD insulation	
DN	OD [mm]	PUR No.	Foam quantity [g]
20 ÷ 25	90	P090	287
32 ÷ 4 0	110	P110	418
50	125	P125	523
65	140	P140	577
80	160	P160	750
100	200	P200	1074
125	225	P225	1302
150	250	P250	1448
150	280	P280	1937
200	315	P315	2104
200	355	P355	2933
250	400	P400	3520
300	450	P450	3921
350	500	P500	2x2610
400	560	P560	2x2825
500	630	P630	2x3404
500	710	P710	2x4776

MANUAL FOAMING – non-insulated ends L=220 mm			
Steel pipe	Casing pipe	STANDARD insulation	
DN	OD [mm]	PUR No.	Foam quantity [g]
20÷25	90	P90-L	730
32÷40	110	P110-L	835
50	125	P125-L	1070
65	140	P140-L	1285
80	160	P1600-L	2025
100	200	P200-L	2210
125	225	P225-L	2480
150	250	P250-L	3490
200	315	P315-L	4275
250	400	P400-L	4725
300	450	P450-L	5293

Polyurethane foam components for filling elbow joints

MANUAL FOAMING				
Joint dimension	STANDARD insulation		PLUS insulation	
	PUR No.	Foam quantity [g]	PUR No.	Foam quantity [g]]
MK90	K090	694	–	–
MK110	K110	1055	K110	1055
MK125	K125	1175	K125	1175
MK140	K140	1282	K140	1282
MK160	K160	1541	K160	1541
MK200	K200	2832	K200	2832
MK225-250	K225	4865	K225	4865

The components should be stored at a temperature from 18 to 23°C – see "FINPOL Rohr pre-insulated pipeline installation manual".

Quantities of PUR foam components in packed sets

Set No.	Name Set type	Old name Set type	Component A	Quantity of Component A in a bottle [±5g] [g/pc.]	Component bottle type A [cm³]	Component B [ml]	Quantity of Component B in a bottle [±5g] [g/pc.]	Component bottle type B [cm³]	Set Quantity of components A+B [g] [g/set]
1	P90	90/20	Ekopur U3320W	111	500	Ekopur U	176	500	287
2	P90-L	90/20L		160	500		240	500	400
3	P110	110/32		161	1000		257	500	418
4	P110-L	110/32L		200	500		305	1000	505
5	P125	125/50		201	1000		322	500	523
6	P125-L	125/50L		225	500		340	1000	565
7	P140	140/65		222	1000		355	1000	577
8	P140-L	140/65L		290	500		440	1000	730
9	P160	160/80		288	1000		462	1000	750
10	P160-L	160/80L		340	500		520	1000	860
11	P200	200/100					661	1000	1074
12	P200-L	200/100L		560	1000		835	2000	1395
13	P225	225/125		501	2000		801	1000	1302
14	P225-L	225/125L		610	1000		920	2000	1530
15	P250	250/150		557	2000		891	1000	1448
16	P250-L	250/150L		685	1000		1025	2000	1710
17	P280	280/150		745	5000		1192	2000	1973
18	P280-L	315/200L		955	1000		1430	5000	2385
19	P315	315/200		809	5000		1296	2000	2104
20	P315-L	315/200L		0			0		
21	P355	355/200		1128	5000		1805	2000	2933
22	P355-L			785	1000		1175	5000	1960
23	P400	400/250		1354	5000		1620	2000	2700
24	P400-L			1260	2000		1890	5000	3150
25	P450	450/300		1508	2000		2413	5000	3921

Approximate quantity of components per 1 joint, Lw = 34 cm

UNIT FOAMING – STANDARD INSULATION

Steel pipe DN	Casing pipe OD [mm]	A [g]	A [ml]	B [g]	B [ml]
20	90	62	57	98	79
25	90	58	53	91	74
32	110	89	81	139	112
40	110	83	76	131	105
50	125	103	95	162	131
65	140	119	110	188	151
80	160	155	142	244	197
100	200	240	220	376	304
125	225	294	270	461	372
150	250	302	277	474	382
200	315	453	415	711	573
250	400	765	701	1200	968
300	450	881	808	1383	1115
350	500	1104	1013	1734	1398
400	560	1327	1217	2083	1680
450	630	1685	1546	2645	2133
500	630	1201	1102	1886	1524
500	710	2217	2034	3480	2807
600	800	2384	2187	3743	3019
700	900	2685	2463	4215	3399
800	1000	2963	2718	4652	3751
900	1100	3241	2974	5089	4104
1000	1200	5422	4974	8513	6865

Approximate quantity of components per 1 joint, Lw = 34 cm

UNIT FOAMING – PLUS INSULATION

Steel pipe DN	Casing pipe OD	A		B	
	[mm]	[g]	[ml]	[g]	[ml]
20	110	95	87	158	128
25	110	91	84	152	122
32	125	117	107	196	158
40	125	112	103	188	151
50	140	135	124	227	183
65	160	160	155	285	229
80	200	279	256	469	379
100	225	326	299	548	442
125	250	390	358	655	528
150	315	623	571	1046	844
200	400	986	905	1657	1337
250	450	1122	1029	1884	1520
300	500	1266	1162	2127	1716
350	560	1643	1507	2760	2225
400	630	2034	1866	3415	2756
450	710	2598	2384	4365	3520
500	900	3372	3094	5665	4569
600	900	3844	3527	6459	5209
700	1000	4320	3963	7258	5853

Approximate quantity of components per 1 joint, Lw = 34 cm

UNIT FOAMING – 2×PLUS INSULATION

Steel pipe DN	Casing pipe OD	A		B	
	[mm]	[g]	[ml]	[g]	[ml]
20	125	127	116	211	170
25	125	123	113	204	165
32	140	153	140	256	207
40	140	148	135	248	200
50	160	190	174	319	257
65	200	299	275	503	406
80	225	375	344	630	508
100	250	434	398	728	587
125	315	722	663	1213	978
150	400	1173	1076	1971	1590
200	450	1372	1259	2305	1859
250	500	1553	1425	2610	2104
300	560	1846	1694	3102	2501
350	630	2400	2202	4032	3251
400	710	3011	2763	5059	4080
450	800	3837	3520	6446	5199
500	900	4872	4470	8185	6601
600	1000	5521	5066	9276	7481

The above-mentioned quantities refer to a 34 cm long joint.
For longer joints the foam quantity should be calculated proportionally.

Note: The components should be stored at a temperature from 18 to 20°C – see “FINPOL Rohr pre-insulated pipeline installation manual”.

Pulse alarm signaling components



Clamping ferrules
Used for connecting alarm system wiring with a cross-section of 1.5 mm2 with the use of special clamping pliers.
There are two clamping ferrules per joint.



Wire bracket
It is used as a support for signaling wires to ensure appropriate distance between the wire and the steel pipe.
There are two wire brackets per joint.



Paper tape (roll)
It is used for fixing brackets to a steel pipe. 1 roll = 50 running meters.



Tin LC60-TLR 157 Ø2 (250 g)
It is used for soldering alarm signaling wires connected by means of a clamping ferrule.



Soldering paste (100 g)
Double junction box 67LV45 with KE-001 cable



Double junction box 67LV45 with KE-001 cable
The box is used where an alarm loop must be closed, one box per loop.



Single junction box 67LV15
The box is used where it is necessary to connect the alarm system to the detector or resetting terminal.



Detector resetting terminal 66LV72
It is used to "mute" the signal sent by the detector. It is used together with the single junction box 67LV15.
It is used for closing the measuring sockets of unused ducts in the measuring device.

Pulse system – measuring equipment

Below we present the most popular products from the category of alarm signaling elements, in order to see the full offer, please contact us.

LX9024



A meter for measuring the pulse alarm system in pre-insulated district heating networks – LX9024

1. Measurement information is presented on an alphanumeric LCD display, 2 × 16 characters, illuminated.
2. Measurement voltage of polyurethane insulation: 24 V DC.
3. Measurement ranges:
   - Polyurethane insulation resistance measurement: 0.1 kΩ to 200 M,
   - Alarm loop wiring resistance measurement: 0 to 68Ω,
   - Instrument battery temperature measurement: 5 to 50°C.

4 Measuring errors:
   - Polyurethane insulation resistance measurement accuracy from 0.1 kΩ to 200 MΩ: ± 5% ± 2 digits of measured value,
   - Alarm loop wiring resistance measurement accuracy: ± 5% ± 2 digits.
   - Power supply: set of 7.2 V NiCd /700 mAh batteries.
   - Range of working and storage temperatures: 5 to 50°C.

ACN-2Z



A fixed detector is used to control the technical condition of two sections of a pre-insulated district heating network with a pulse alarm system – ACN-2Z

1. Number of controlled sections of the district heating network: 2.
2. Maximum length of the controlled section of the district heating network: 2000 m.
3. Limit value of the polyurethane insulation resistance: 150Ω (100 to 550Ω).
4. Polyurethane insulation resistance measurement accuracy: ±10%.
5. Power consumption: 0.75 VA.
6. Power supply: 230 V 50 Hz.
7. Working temperature range: 5 to 50°C.

ACN-4N



A fixed detector used to control the technical condition of four sections of a pre-insulated district heating network with a pulse alarm system – ACN-4N

1. Number of controlled sections of the district heating network: 4.
2. Maximum length of the controlled section of the district heating network: 2000 m.
3. Measurement information is presented on an alphanumeric display, 2 ×16 characters.
4. Limit value of the polyurethane insulation resistance: 150Ω (100 to 550Ω).
5. Polyurethane insulation resistance measurement accuracy: ±10%.
6. Power consumption: 3 VA.
7. Power supply: 230 V 50 Hz.
8. Working temperature range: 5 to 50°C.

LPS-2C



A fixed detector used to control the technical condition of two sections of a pre-insulated district heating network with an alarm system – LPS-2C

1. Total length of the controlled district heating network: ≤ 2000 m.
2. Polyurethane insulation resistance measurement error: ±10%.
3. Power supply: 24 V (4 VA).

LPS-2I



**The instrument is designed to monitor two sections of a pre-insulated
district heating network with a pulse alarm system – LPS-2I.**

1. Number of controlled sections of the pre-insulated network: 2.
2. Maximum length of the controlled section of the district heating network: 2000 m.
3. Measurement information is presented on an alphanumeric display, 2 × 16 characters: red LED – FAILURE.
4. Polyurethane insulation resistance measurement range: 0.2 kΩ to 200 MΩ.
5. Polyurethane insulation resistance measurement accuracy: ± 5% of read value ± 3 digits.
6. Alarm loop resistance measurement range: 0 to 70Ω.
7. District heating network section length measurement range: 0 to 2,000 m.
8. Power supply: 230 V 50 Hz.
9. Working temperature range: 5 to 50°C.

Resistance alarm signaling components



BS-QU clamping ferrules
Used for connecting alarm system wiring with the use of special clamping pliers.
There are two clamping ferrules per joint.



BS-SRA heat-shrink tubing
Used for insulation of alarm wires clamped in the BS-QU ferrule.



Wire bracket
It is used as a support for signaling wires to ensure appropriate distance between the wire and the steel pipe.
There are two wire brackets per joint.



PPM metering box
The box is used at the end of the measuring loop in the building. There are two loops per one PPM box. A portable LH20S tester or LP-10S fault finder can be connected to it.
Alarm wires from a pre-insulated pipe are connected to the box by means of ME2019TK2 and ME2019TK4 wires and a ZPB connector.



PPA junction box
The box is used at the ends of the measuring loop in buildings and chambers.
Alarm wires from a pre-insulated pipe are connected to the box by means of a ME2019TK2 wire.



ME2019TK2 wire
A two-core wire used to connect the alarm wires to the junction box or a ZPB connector.
A two-core wire used to lead the alarm wires from underneath the heat-shrink gasket and to connect them to the junction box or a ZPB connector.



ME2019TK4 wire
A four-core wire used to connect a ZPB connector to a PPM metering box.



ZPB type connector
Chassis ground during moisture measurements.

Resistance system – measuring equipment

LH-20S



Instrument for measuring and detecting characteristic states in a pre-insulated district heating network with a BRANDES resistance alarm system – LH-20S

1. Measurement information is presented on an alphanumeric LCD display, 2 × 16 characters.
2. Measuring errors:
   - Resistance measurement accuracy within the rangedetermined by MH: ±5%,
   - Alarm loop resistance measurement accuracy: ±0.2%.
3. Power supply: 2×6F22 (2×9 V).
4. Working temperature range: 5 to 50°C.

LP-10S



Designed for locating moisture in pre-insulated district heating networks with a resistance alarm system – LP-10S

1. Length of the controlled alarm loop: 3 to 2000 m.
2. Resistance of the controlled alarm loop: 16 to 12,000Ω.
3. Polyurethane insulation resistance: <10MΩ (MH≤11).
4. The measurement result is presented on a digital LCD display.
5. Measuring range: 0 to 100% of the length of the controlled alarm loop.
6. Measurement resolution: 0.1%.
7. Moisture location error: ± 1 m/± 0.1%.
8. Power supply: 2 × 6 F22.
9. Range of changes of the working and storage temperature: 5 to 50°C.

LPS-2B



A fixed detector used to control the technical condition of two sections of a pre-insulated district heating network with an alarm system – LPS-2B

1. Total length of the controlled district heating network: ≤ 2000 m.
2. Polyurethane insulation resistance measurement error: ±10%.
3. Power supply: 24 V (4 VA).

MSP-1



A device for automatic continuous control of four sections of a district heating network with a Brandes resistance alarm system – MSP-1

1. Maximum number of controlled sections of the district heating network: 4.
2. Measurement ranges:
   - MH: 1 to 14 and 0,
   - Insulation resistance between the sensor wire and the steelpipe: 100Ω to 50 MΩ,
   - Resistance of the sensor loop: 11 to 5,734Ω,
   - Sensor loop resistance length: 2 to 1,750 m,,
   - Leakage location: 2 to 1750 m.
3. Power consumption: 16 VA.



Designed to monitor two sections of a district heating network with a Brandes alarm system – MHL-300R

1. Number of controlled sections of the pre-insulated district heating network: 2.
2. Maximum length of the controlled section of the district heatingnetwork: 2000 m.
3. Measurement information is presented on an alphanumeric display, 2×20 characters.
4. Moisture level measurement range: MH1 to 14 and 0.
5. Polyurethane insulation resistance measurement range: 0.1Ω to 200 MΩ.
6. Alarm loop resistance measurement range: 0 to 12,050Ω.
7. Alarm loop resistance measurement accuracy: ±0.1%.
8. Supply voltage: 12 V DC.
9. Working temperature range: 5 to 50°C.



Designed to monitor two sections of a pre-insulated district heating network with a Brandes alarm system and automatic moisture location – LPS-2R

1. Number of controlled sections of the pre-insulated network: 2.
2. Maximum length of the controlled section of the district heatingnetwork: 2000 m.
3. Measurement information is presented on an alphanumeric display, 2×20 characters: red LED – FAILURE.
4. Polyurethane insulation resistance measurement range: 0.2 kΩ to 200 MΩ.
5. Moisture level measurement range: MH1 to 14 and 0.
6. Polyurethane insulation resistance measurement accuracy: ±5% of read value ±3 digits.
7. Alarm loop resistance measurement range: 0 to 12,050Ω.
8. District heating network section length measurement range: 0 to 2,000 m.
9. Leakage location accuracy: ± 2 m/± 0.2%.
10. Power supply: 230 V 50 Hz.
11. Working temperature range: 5 to 50°C.

Weight of pre-insulated pipes

Welded steel pipe			HDPE casing pipe			Weight of 1 running meter [kg/1 running meter]		
DN	**Pipe outer diameter OD** [mm]	**Outer thickness of the pipe s** [mm]	**STANDARD insulation OD** [mm]	**PLUS insulation OD** [mm]	**2×PLUS insulation OD** [mm]	**STANDARD insulation m** [kg/m]	**PLUS insulation m** [kg/m]	**2×PLUS insulation m** [kg/m]
20	26,9	2,9	90	110	125	3,1	**3,5**	**3,8**
25	33,7	2,9	90	110	125	3,5	3,9	4,2
32	42,4	3,2	110	125	140	4,8	5,1	5,5
40	48,3	3,2	110	125	140	5,3	5,6	5,9
50	60,3	3,2	125	140	160	6,4	6,8	7,3
65	76,1	3,2	140	160	200	7,9	8,4	9,6
80	88,9	3,2	160	200	225	9,3	10,5	11,5
100	114,3	3,6	200	225	250	13,4	14,3	15,3
125	139,7	3,6	225	250	315	16,2	17,2	20,3
150	168,3	4,0	250	315	400	20,9	24,0	29,1
200	219,1	4,5	315	400	450	30,7	35,7	39,2
250	273,0	5,0	400	450	500	43,6	47,1	51,0
300	323,9	5,6	450	500	560	56,5	60,4	65,4
350	355,6	5,6	500	560	630	63,6	68,6	75,4
400	406,4	6,3	560	630	710	80,5	87,3	95,8
500	508,0	6,3	630	710	900	97,9	106,4	117,2
500	508,0	6,3	710	800	900	106,4	117,2	130,7
600	610	7,1	800	900	1000	138,8	152,3	167,1
700	711,0	8,0	900	1000	–	178,4	193,2	–
800	813,0	8,8	1000	–	–	220,8	–	–
900	914,0	10,0	1100	–	–	276,7	–	–
1000	1016,0	11,0	1200	–	–	334,1	–	–

RAPDOL PIPES sp. z o.o. reserves the right to change the proposal,
technical data and packaging units of the products presented in this issue without prior notice.
The drawings and pictures are for illustration purposes only and show only the visual qualities of the products.
This publication is a commercial communication and is not a commercial proposal within the meaning of Article 66 of the Polish Civil Code.

RADPOL PIPES

PIPE SOLUTIONS

PRE-INSULATED SYSTEMS

ARMOUR VALVE

Distributed by Armour Valve
Phone: +1-800-268-3508
Email: sales@armourvalve
Website: armourvalve.com

RADPOL PIPES SP. Z O.O.

Kolonia Prawiedniki nr 57 | 20-515 Lublin | +48 81 750 01 70 | info@radpolpipes.eu | radpolpipes.eu

NIP 5272911103 | REGON 384811614 | KRS 0000812493